BER-VAC

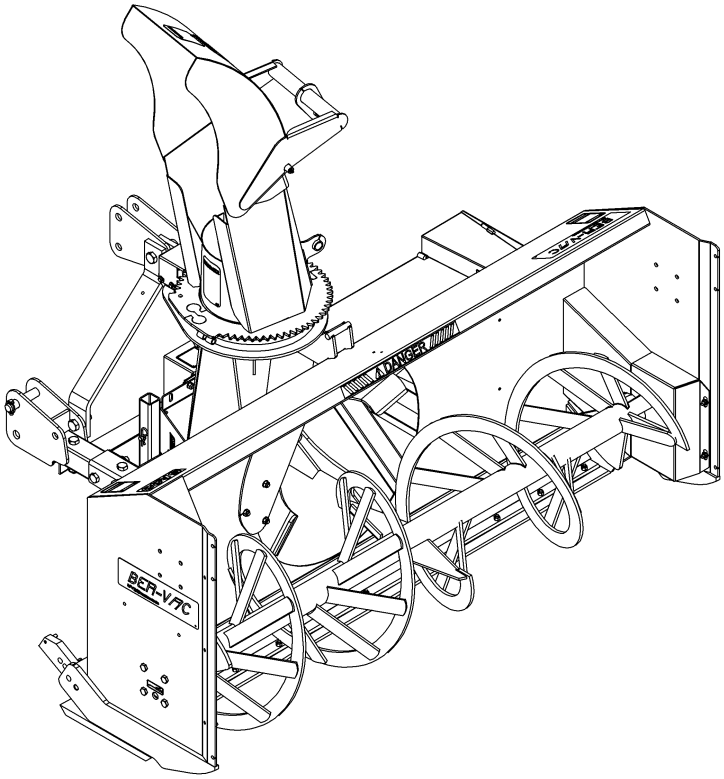

OPERATOR'S AND PARTS MANUAL

TWO STAGE SNOWBLOWERS
MODELS SA88 and SA92-L

SERIAL NO. SJT08189 AND UP

INTERTEK
ISO 9001:2000

OM 0364SB-A
03/09

TABLE OF CONTENT

INTRODUCTION – TO THE PURCHASER 3

SAFETY PRECAUTIONS 4
- Before Operation 4
- Notice 5
- The Snowblower 5
  - Before Operation 5
  - Snowblower operation 6
- The Tractor 7
  - General Information 7
  - Operating the Tractor 7
  - During Operation 8
  - Roll-Over Protective Structure (ROPS) 8
- Transport 8
- Maintenance 9
- Storage 9

DECALS 10

ASSEMBLY 11
- Snowblower Assembly 11
  - Three Point Hitch Installation 11
  - Snowblower Installation 12
  - Installation of the Snowblower with Quick Hitch 13
  - How to Determine Driveline Angles 14
  - Angles at Each End of Driveline 15
  - Determining Driveline Length 15
  - Chute Installation 17
  - Hydraulic Rotation by Motor – 8164B & BER0030 19
  - Driveline Installation 20
  - Removing Snowblower from Tractor 20

OPERATION 21
- General Preparation 21
- Operating Controls 21
  - Deflector Adjustment 21
  - Raising and Lowering the Snowblower 21
  - Work and Travel Speed 21
  - Drive Shaft Operation 21
  - Skid Shoes Adjustment 21
- Snow Removal Methods 21

TABLE OF CONTENT

MAINTENANCE 23
Maintenance 23
Shearbolts 23
Drive Shaft 23
Driveline 23
Chain Idler adjustment 23
Lubrication 24
Driveline Troubleshooting 26

PARTS 29
Introduction 29
Snowblowers - SA88, SA92-L 30
Three Point Hitch 34
Chain Idler 35
Standard Chute - 8242 36
Standard Chute – 8167B 37
Hydraulic Rotation by Motor – 8164B & BER0030 38
Gearbox – 662195 39
Driveline - 662538 40

AVAILABLE OPTIONS 41

WARRANTY 42

TORQUE SPECIFICATION TABLE 43

INTRODUCTION

TO THE PURCHASER

All BER-VAC and BLIZZARD products are designed to give safe, dependable service if they are operated and maintained according to instructions. **Read and understand this manual before operation.**

This manual has been prepared to assist the owner and operators in the safe operation and suitable maintenance of the implements. The information was applicable to products at the time of manufacture and does not include modifications made afterwards.

Read and understand this operator's manual before attempting to put an implement into service. Familiarize yourself with the operating instructions and all the safety recommendations contained in this manual and those labeled on the implements and on the tractor. Follow the safety recommendations and make sure that those with whom you work follow them.

Illustrations

The illustrations may not necessarily reproduce the full detail and the exact shape of the parts or depict the actual models, but are intended for reference only

Direction Reference

Right hand and left hand are determined by those seen by the standing behind the machine.

To assist your dealer in handling your needs, please record hereafter the model number and serial number of your implement and tractor. It is also advisable to supply them to your insurance company. It will be helpful in the event that an implement or tractor is lost or stolen.

MODEL : _____

SERIAL NUMBER : _____

DATE OF PURCHASE : _____

SAFETY PRECAUTIONS

SAFETY FIRST

This symbol, the industry's "Safety Alert Symbol", is used throughout this manual and on labels on the machine itself to warn of the possibility of personal injury. Read these instructions carefully. It is essential that you read the instructions and safety regulations before you attempt to assemble or use this unit.

DANGER : Indicates an immediately hazardous situation which, if not avoided, will result in death or serious injury.

WARNING : Indicates a potentially hazardous situation which, if not avoided, could result in death or serious injury.

CAUTION : Indicates a potentially hazardous situation which, if not avoided, may result in minor or moderate injury.

IMPORTANT : Indicates that equipment or property damage could result if instructions are not followed.

NOTE : Gives helpful information.

All products are designed to give safe, dependable service if they are operated and maintained according to instructions. **Read and understand this manual before operation**. It is the owner's responsibility to be certain anyone operating this product reads this manual., and all other applicable manuals, to become familiar with this equipment and all safety precautions. Failure to do so could result in serious personal injury or equipment damage. If you have any questions, consult your dealer.

BEFORE OPERATION

Children

Tragic accidents can occur if the operator is not alert to the presence of children. Children are generally attracted to machines and the work being done. Never assume children will remain where you last saw them.

1. Keep children out of the operating area and under the watchful eye of another responsible adult.
2. Be alert and turn machine off if children enter the work area.
3. Before and when backing, look behind and look for small children.
4. Never carry children while operating the machine. They may fall off and be seriously injured or interfere with safe operation of the machine.
5. Never allow children to play on the machine or attachment even when turned off.
6. Never allow children to operate the machine even under adult supervision.
7. Use extra care when approaching blind corners, shrubs, trees, or other obstructions that might hide children from sight.

NOTICE

A safe operator is the best insurance against accidents. All operators, no matter how experienced they may be, should read this Operator's Manual and all other related manuals before attempting to operate an implement. Please read the following section and pay particular attention to all safety recommendations contained in this manual and those labeled on the implements and on the tractor.

THE SNOWBLOWER

Before Operation

1. Read and understand this operator's manual and tractor operator's manual. Know how to operate all controls and how to stop the unit and disengage the controls quickly.

2. Never wear loose, torn, or bulky clothing around the tractor and implement. It may catch on moving parts or controls, leading to the risk of accident.

3. Before the snow season, thoroughly inspect the area where the equipment is to be used and remove all doormats, sleds, boards and other foreign objects.

4. Disengage clutch and shift into neutral before starting the engine.

5. Do not operate equipment in wintertime without wearing adequate winter garments.

6. Never attempt to make any adjustments while engine is running. Read this manual carefully to acquaint yourself with the equipment as well as the tractor operator's manual. Working with unfamiliar equipment can lead to accidents. Be thoroughly familiar with the controls and proper use of the equipment. Know how to stop the unit and disengage the controls quickly.

7. Keep all shields in place and properly tighten all mounting hardware.

8. Periodically, inspect all moving parts for wear and replace with authorized service parts if an excessive amount of wear is present.

9. Replace all missing, illegible, or damaged safety and warning decals. See list of decals in the operator's manual.

10. Do not modify or alter this equipment or any of its components, or any equipment function without first consulting your dealer.

11. Keep safety decals clean of dirt and grime.

Snowblower Operation

1. Before leaving the tractor unattended, take all possible precautions. Disengage the PTO, stop the engine and remove the ignition key. Lower the implement to the ground.
2. Before starting the snowblower, remove any ice that has accumulated in the auger/impeller.
3. Watch carefully for foreign objects that could enter the blower while operating.
4. Be sure the clutch switch/lever is in OFF position before starting engine.
5. Exercise extreme caution when operating on or crossing a gravel drive, walks, or roads. Stay alert for hidden hazards or traffic. Do not carry passengers.
6. Never carry passengers.
7. Adjust collector housing height to clear gravel or crushed rock surface.
8. Do not put hands or feet near rotation parts. Keep clear of discharge opening at all times.
9. Stop the engine, remove the key, and allow the rotating parts to stop before unclogging the collector/impeller housing or chute, and making any repairs, adjustments or inspections. Use only a 36" long piece of wood to unclog blower.
10. If the snowblower starts to vibrate abnormally, stop the engine immediately and check for cause. Excessive vibration is generally a sign of trouble.
11. Do not run the engine indoors except when starting engine and transporting attachment in or out of building. Carbon monoxide gas is colorless, odorless and deadly.
12. Exercise extreme caution when changing direction on slopes. Do not attempt to operate on steep slopes.
13. Never operate snowblower without guards, and other safety protective devices in place.
14. Never operate snowblower near glass enclosures, automobiles, window wells, embankments, etc., without proper adjustment of snow discharge angle.
15. Never operate machine at high transport speeds on a slippery surface.
16. Use extra caution when backing up.
17. Do not direct discharge at bystanders or animals. Ejected objects may cause injury.
18. Disengage power to auger/impeller when transporting or when not in use.
19. Never operate the snowblower without good visibility and lighting.
20. Prolonged exposure to loud noise can cause impairment or loss of hearing. Wear a suitable hearing protective device such as earmuffs or earplugs to protect against objectionable or uncomfortable noises
21. Never allow anyone to remain close to the working area.

THE TRACTOR

General Information

1. Read the operator's manual carefully before using tractor. Lack of operating knowledge can lead to accidents.
2. Do not allow anyone but the operator to ride on the tractor. There is no safe place for extra riders

Operating the Tractor

1. Never run the tractor engine in a closed building without adequate ventilation, as the exhaust fumes are very dangerous.
2. Adopt safe driving habits: If the tractor is equipped with independent brake pedals (left side/right side), always lock the brake pedals together unless independent braking is required. Never use independent braking during transport.
3. Always drive at a safe speed according to your local regulation and make sure to drive at a speed that will allow for safe emergency stops.
4. Reduce speed before turning to avoid tipping the tractor. Keep a minimal speed.
5. Always keep the tractor engaged when going down a slope. Never go down in neutral..
6. Never allow an open flame near the fuel tank or battery.
7. Make sure the shield is installed when using a PTO-driven equipment and always replace the shield if damaged.
8. Always bring the tractor to a complete stop, shut off the engine, lower the implement to the ground and remove the ignition key before leaving the tractor.
9. Never park the tractor on a steep slope.
10. Do not attempt to operate on steep slopes. Avoid sudden turns when going up a steep slope.
11. Handle fuel with care, as it is highly flammable.
12. Use approved fuel container.
13. Never add fuel to a running engine or a hot engine.
14. Fill fuel tank outdoors with extreme care. Never fill fuel tank indoors. Replace fuel cap securely and wipe up spilled fuel.
15. Never allow anyone to operate the snowblower until they are thoroughly familiar with basic tractor and snowblower operation.
16. Make sure the tractor is counterweighted as recommended by your dealer. Weights provide the necessary balance to prevent tip-over or loss of traction or steering.
17. Always make sure all snowblower components are properly installed and securely fastened BEFORE operation.
18. Never attempt to start the engine or engage the snowblower while standing beside the tractor.
19. Always start the engine when sitting on the driver's seat. Place all transmission and snowblower levers in neutral.
20. NEVER bypass the starter security mechanism by short-circuiting the starter terminals to start the engine. The tractor could move suddenly.
21. If the starter's security mechanism is not functional, see your dealer immediately.

During Operation

1. Do not allow anyone to ride on the tractor/snowblower at any time. There is no safe place for passengers on this equipment. The operator MUST sit in the tractor seat.
2. Eye and hearing protection is recommended when operating the snowblower.
3. Operate only during daylight hours, or when the area is well lit with bright artificial light.
4. Disengage the PTO (turn to "OFF"), place the transmission in neutral, set the parking brake, shut off the engine and remove the key, and make sure rotating components have stopped BEFORE leaving the operator's seat.
5. Inspect the snowblower after striking any foreign object to assure that all snowblower parts are safe and secure and not damaged.
6. Look carefully at the ground and the work area. Note the holes, rocks or other hidden obstacles. ALWAYS check the work area before using the snowblower.
7. NEVER operate the snowblower near ditches or embankments.
8. NEVER operate the snowblower in steep slopes due to the risk of tipping over.
9. Work going up and down, not sideways, in intermediate slopes.
10. Back up steeper slopes with the snowblower disengaged then engage while going down.
11. Slow down before changing directions on a slope.
12. Make sure the tractor is counterweighted as recommended by your dealer. Weights provide the necessary balance to prevent tip-over or loss of traction or steering.
13. Never stand besides the snowblower when the engine is on.

Roll-Over Protective Structure (ROPS)

1. DO NOT weld, drill or alter the ROPS. Damaged ROPS must not be straightened or used. If damage does occur, consult your dealer.
2. If the ROPS is lowered or removed from the tractor for any reason, it must be erected and/or refitted immediately. Original bolts or equivalent replacements must be used and tightened to the correct torque.
3. Your dealer does not recommend usage of tractor with ROPS removed.
4. If a fold-down ROPS is used, the ROPS can be folded down for storage, but it must be pinned in the upright position prior to operation.
5. Seat belt usage: With ROPS installed on the tractor it is imperative that the seat belt be installed, used and correctly adjusted, at all times. DO NOT use a seat belt if operating without ROPS.

Additional Safety Equipment

Keep a fire extinguisher and a first hand kit within reach.

TRANSPORT

1. If the tractor/snowblower is to be driven on public roads, it must be equipped with an SMV (Slow Moving Vehicle) sign. Check local traffic codes that may apply to unit usage on public roads and highways in your area.
2. Be alert for all other traffic when driving the tractor/snowblower on public roads or highways.
3. Always disengage the snowblower before transport.

MAINTENANCE

1. Park the tractor/snowblower on level ground, set the parking brake, disengage the PTO, shut off the engine, remove the key, and lower the implement to the ground BEFORE making any snowblower adjustments.
2. To avoid injury, do not adjust, unclog or service the snowblower with the tractor engine running. Making sure rotating components have completely stopped before leaving the operator's seat
3. Keep the tractor/snowblower clean. Snow and ice build-up can lead to malfunction or personal injury from thawing and refreezing in garage.
4. Always wear eye protection when cleaning or servicing the snowblower.
5. Service the unit in safety: DO NOT service the tractor while the engine is running or hot, or if the unit is in motion. Always lower snowblower to the ground. If necessary to service unit with blower raised, securely support with stands or suitable blocking before working underneath. Do not rely on hydraulically supported devices for your safety. They can settle suddenly, leak down, or be accidentally lowered.
6. Do not attempt to service machine, clear obstructions or unplug blockages with the engine running. Always shut off engine and allow all motion to cease.
7. The manufacturer will not claim responsibility for fitment of unapproved parts and/or accessories and any damages as a result of their use.
8. Make sure all shields and guards are securely in place following all service, cleaning, or repair work.
9. Do not modify or alter this equipment or any of its components or operating functions. If you have questions concerning modifications, consult with your dealer.
10. Do not operate a unit which is defective or has missing parts. Make sure that all recommended maintenance procedures are completed before operating the unit.
11. Check all controls regularly and adjust where necessary. Make sure that the brakes are evenly adjusted.
12. Periodically check all nuts and bolts for tightness, especially wheel hub and rim nuts.
13. Snowblower fan and auger must be checked for tightness. Remove any twine, wire, etc. that may have wrapped on the fan or the auger.
14. To avoid serious personal injury: Escaping hydraulic/diesel fluid under pressure can penetrate the skin causing serious injury. Do not use your hands to check for leaks. Use a piece of cardboard or paper to search for leaks.
15. Stop engine and relieve pressure before connecting or disconnecting lines. Tighten all connections before starting engine or pressurizing lines.

STORAGE

Before storing the snowblower, certain precautions should be taken to protect it from deterioration.

1. Clean the snowblower thoroughly.
2. Make all the necessary repairs.
3. Replace all Safety Signs that are damaged, lost, or otherwise become illegible. If a part to be replaced has a sign on it, obtain a new safety sign from your dealer and install it in the same place as on the removed part.
4. Repaint all parts from which paint has worn or peeled.
5. Lubricate the snowblower as instructed under **"Lubrication"** section.
6. When the snowblower is dry, oil all moving parts. Apply oil liberally to all surfaces to protect against rust.
7. Attach driveline shield safety chain around driveline by passing it over the upper hitch
8. Store in a dry place.

DECALS

Replace Immediately If Damaged.

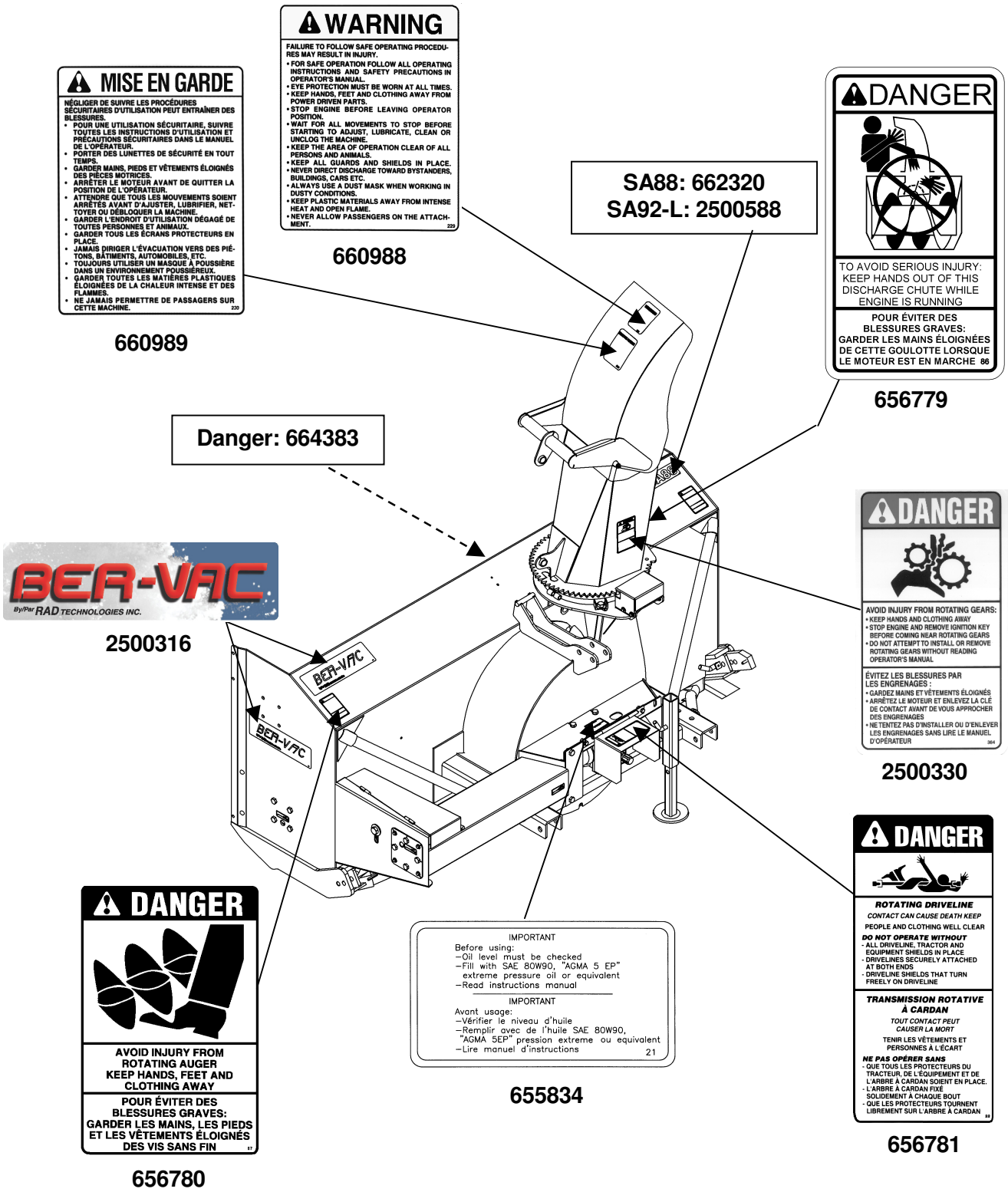

SNOWBLOWER ASSEMBLY

The snowblower is assembled at the factory, however, snowblower kits must be assembled. Use the present manual and lay out all parts for assembly. Separate bolts and nuts into various sizes. After assembly, torque all the bolts according to the Torque Specification Table enclosed at the end of the manual.

Three Point Hitch Installation
(Figure 1)

1. Attach the lower hitches (item 1) to the snowblower placing two reinforcement plates (item 2) under the lower hitches and secure with four 3/4"NC x 5" bolts (item 19), two 3/4"NC x 5 1/2" bolts (item 3), 3/4" lockwashers and 3/4" nylon insert locknuts (items 4-5).
2. Attach the hitches (items 6-7) to the lower hitches (item 1) as illustrated and secure with two 7/8" NC x 2 1/2" bolts and 7/8" stover nuts (items 8-9).
3. Fasten each hitch (items 6-7) to the upper hitch (item 10) using a 7/8" NC x 6" bolt and a 7/8" stover nut (items 11-12).
4. Attach the upper hitch (item 10) to the snowblower as illustrated using a 7/8" NC x 4 1/2" bolt and a 7/8" stover nut (items 13-14).
5. Install the brace (item 15) on the lower hitches (item 1) by inserting two 3/4"NC x 4 1/2" bolts (item 16) in hitches closest holes and secure with lockwashers and nylon insert locknuts (items 17-18).
6. Tighten all bolts according to the ***"Torque Specification Table"*** at the end of the manual.
7. Attach the hose support (item 20) to the upper hitch (item 10) with two 5/16" NC x 1 1/2" serrated flange bolts and two 5/16" serrated flange nuts (items 24-25).
8. Install the two hose clamps (item 21) on the hose support (item 20) with two 3/8" NC x 1 1/2" hex. bolts and two 3/8" NC nylon insert nuts (items 22-23). Do not tighten immediately.

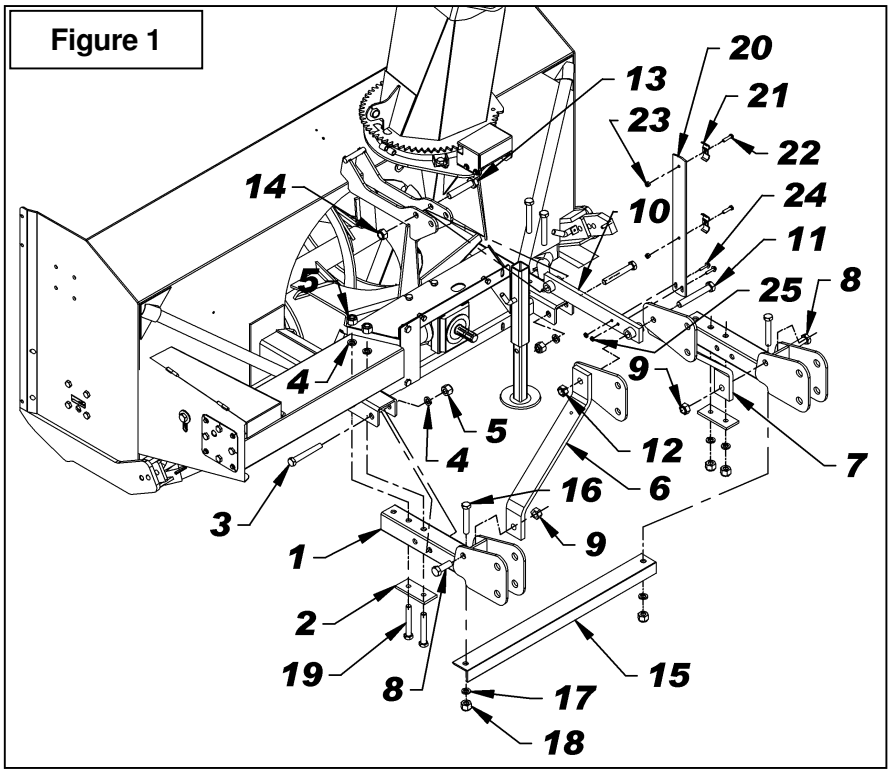

Snowblower Installation
(Figure 2)

1. Attach tractor lower hitch arms (item 1) to snowblower lower hitches (item 7) using the pins and linchpins (items 6-2).
2. Install the tractor adjustable arm (item 3) on the upper or lower hole of the snowblower attaching plates (item 5) using the tractor pins (item 4).
3. To level snowblower front to back, adjust using the tractor adjustable arm (item 3).
4. To level side to side, use leveling crank on right lower lift arm.
5. Set the tractor anti-sway turnbuckles so the snowblower does not sway. Be sure the turnbuckles clear the tractor tires.

WARNING: Before connecting snowblower driveline to tractor drive shaft, make sure driveline is not too long in raised, lowered or middle position. If the driveline is too long it must be shortened, to avoid damaged to tractor.

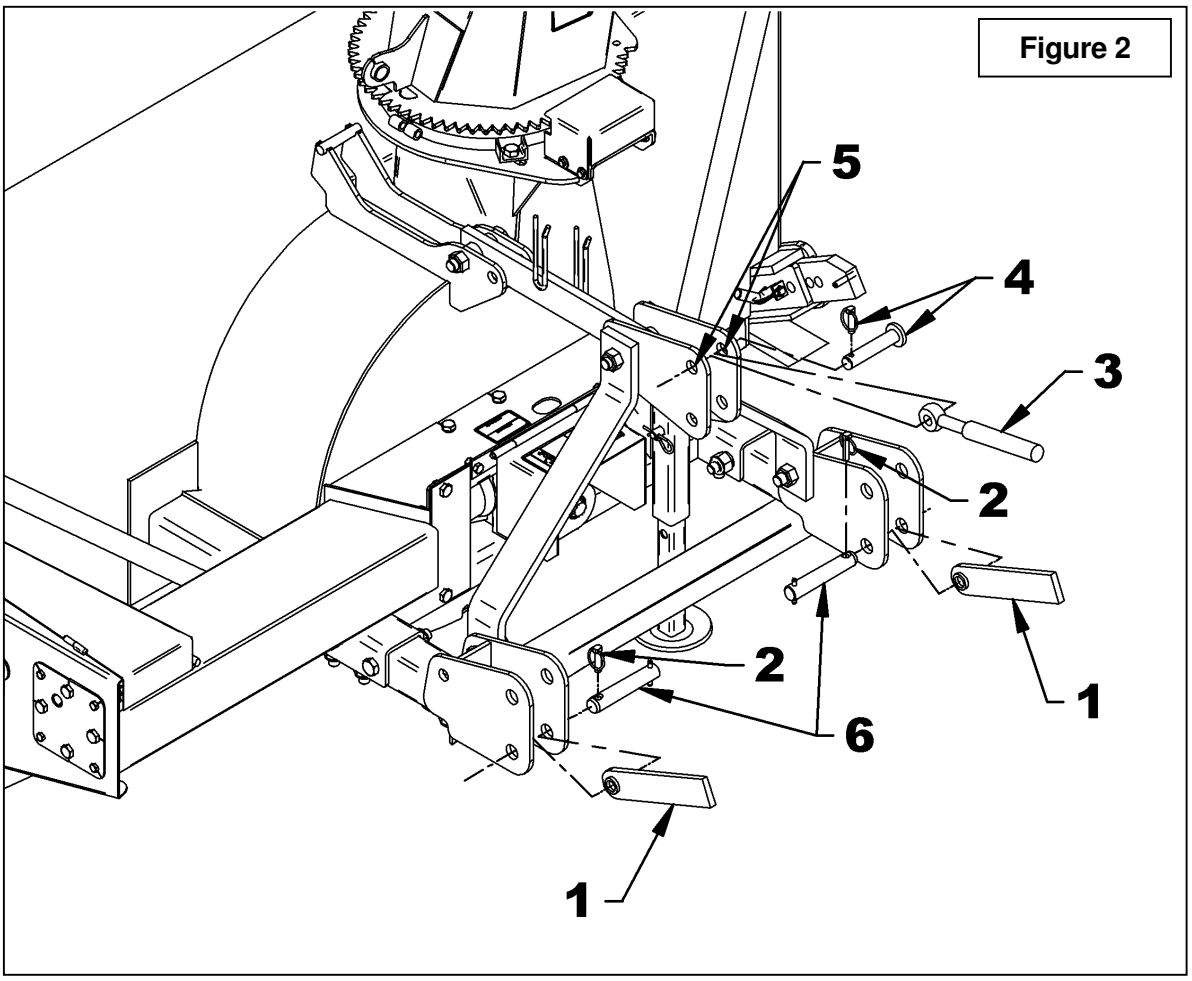

Figure 2

Installation of the Snowblower with Quick Hitch

(Figure 3)

1. Install the 1 1/8" x 6 1/2" lg Cat. 2 pins (item 2) in upper holes by inserting a bushing (item 3 not supplied) between each lower hitch plates and fasten with the linchpins (item 4) as illustrated.
2. Install pins (item 5 not supplied) in the lower hole of the hitches inserting first a bushing (item 6, not supplied) as illustrated on figure.
3. Install the driveline.

CAUTION: Before connecting snowblower driveline to tractor drive shaft, make sure driveline is not too long in raised, lowered and middle position. If the driveline is too long it must be shortened, to avoid damaged to tractor.

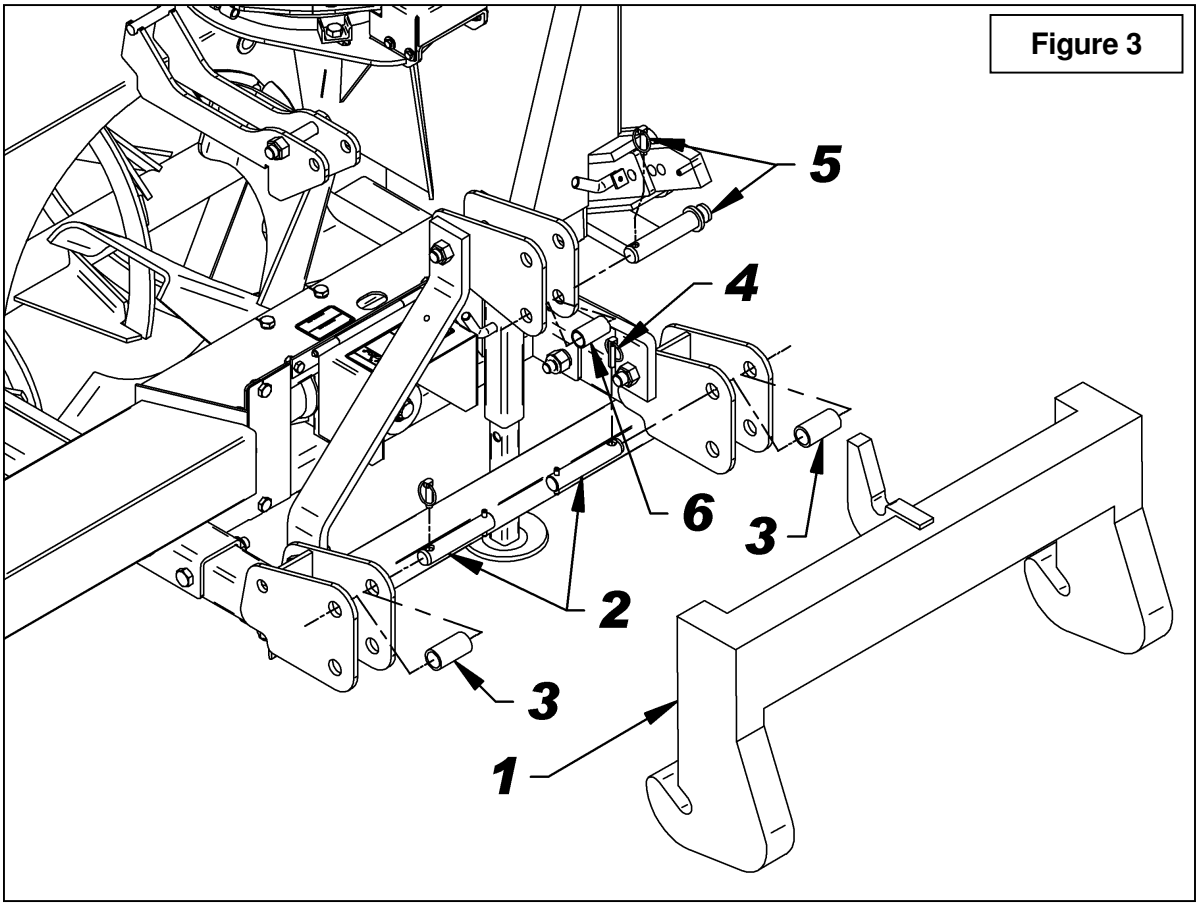

Figure 3

IMPORTANT:

A proper initial installation will give you years of satisfactory service on your equipment. Please read carefully following instructions that have been specially included to help you and ensure you are satisfied with your purchase.

WARNING: Unfortunately, snowblowers will be faced with forgotten or hidden objects under the snow, such as : chain, tires, stones, pieces of wood, etc. In spite of all our efforts, machines are not built to resist all those conditions.

Danger: Tractors Too Big

It is dangerous to use a tractor that is too big and powerful. The tractor will always be able to overload the blower, even if the machine is already at maximum capacity. Furthermore, tractors being very high, the driveline angles will be excessive which means the universal joints will be very vulnerable and the life of the driveline will be dramatically reduced.

How to Determine Driveline Angles

IMPORTANT: To obtain the proper universal joint angles, it is recommended to adjust the three point hitch at the furthest point from the tractor recommended by the manufacturer

The universal joint angle is directly related with the life of driveline. In order to reduce the angle, it is necessary to increase the distance between the snowblower and the tractor.

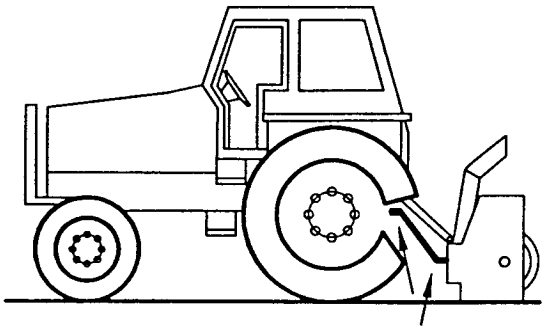

Angles of Driveline Joints Too Large Avoid

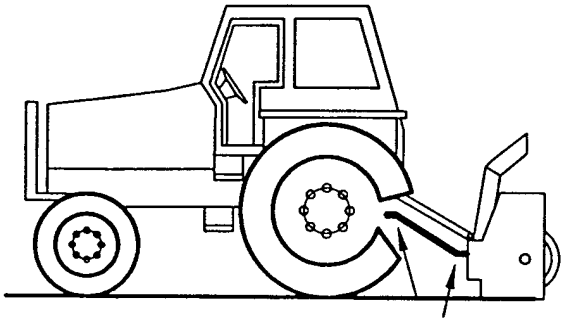

Reasonable Angles of Driveline Joints Acceptable

.

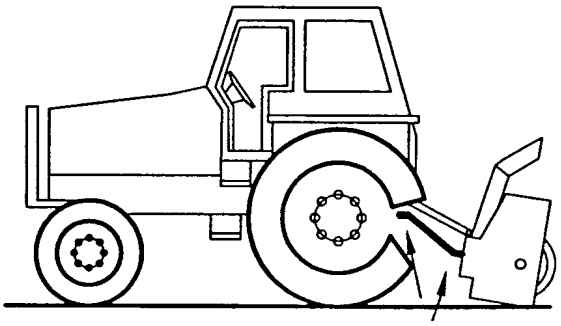

Unequal Angles at Driveline Joints
Avoid

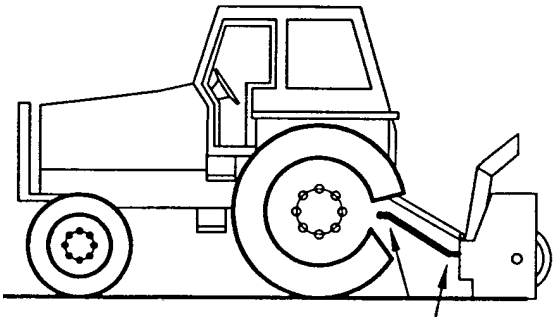

Equal Angles at Driveline Joints
Recommended

Angles at Each End of Driveline

A popular habit is to change the snowblower angle in order to obtain a better scraping effect. This practice can become harmful to the driveline since the angle at each end is unequal. This results in a fan speed variation as well as a drastic increase of load on cross and bearings. To be avoided: It is recommended to always keep tractor driveline and snowblower input shaft parallel.

Determining Driveline Length

IMPORTANT: Before using the equipment, make sure the driveline is not too long. At working position, the two half drivelines must intersect each other sufficiently to insure maximum efficiency but there must not be any interference.

1. To determine the **"L"** length for your tractor model first find the **"X"** factor by measuring the horizontal distance between the end of the tractor's drive shaft and the end of the snowblower's driven shaft when the snowblower is in transport position as shown on Figure 6.
2. Choose in the table below the **"Y"** factor according to the tractor category and deduct that number from **"X"** to determine **"L"** which is the center-to-center length between the universal joints.

Figure 4

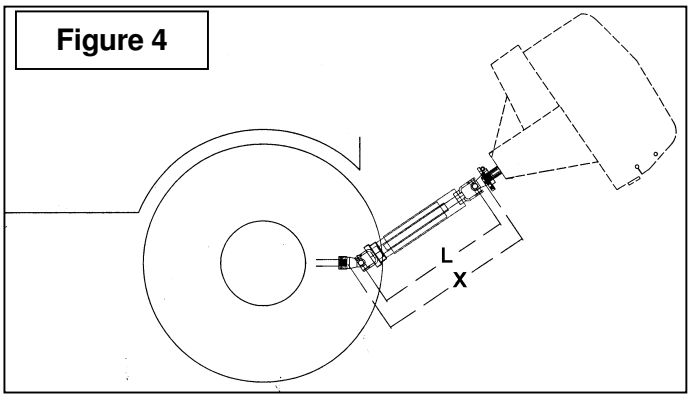

L = X – Y	
3 PTS HITCH CATEGORY	Y
Cat. 2	5 1/2"

NOTE: Before cutting, make sure the two shafts intersect by at least 7 3/4" when in working position that is when the snowblower rests on the ground.

3. Hold the two half-shaft side by side and locate the **"L"** length between the two center-to-center half-shaft universal joints. Mark off the zone to be cut on both halves opposite each half-shaft guard as shown on Figure 7.
4. Cut off inner and outer guard tubes as well as the inner and outer telescopic sections.
5. Cut the guard a second time leaving the same distance between the end of the guard and the end of the shaft as existed before. To obtain the proper distance "A" shown on Figure 8, cut the guard according to the following table:

DISTANCE A	
Male PTO	Female PTO
2"	1 1/2"

6. File down tubes and remove chips.
7. Apply grease to inside of outer telescopic section.

IMPORTANT: Work with fully guarded shafts only!

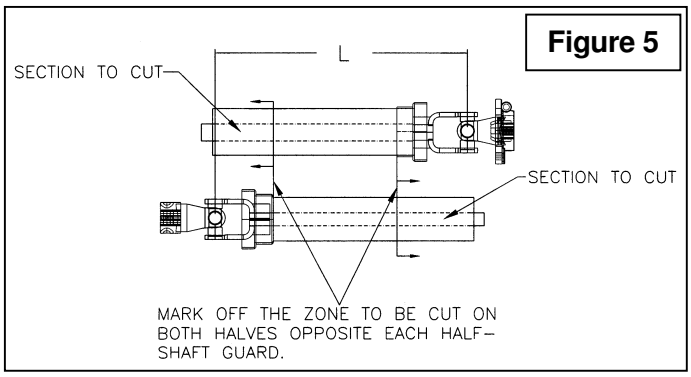

Figure 5

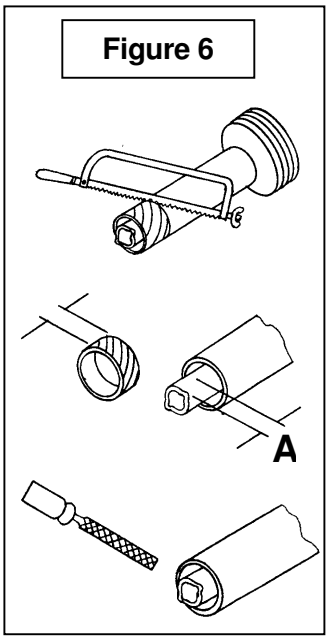

Figure 6

Chute Installation

(Figures 7-7a-7b-7c-7d)

1. **Figure 7:** The snowblower, as delivered. (The model may differ)
2. **Figures 7a:** Take off the retaining plate (item 8) by removing the two 5/8" x 1 1/2" bolts and 5/8" serrated flange nuts (items 1-2).
3. **Figures 7a:** Remove the rotation bushing (item 7) and the gear shield (item 3) by removing the four 5/16" x 1" bolts, the 3/8" flat washers and the 5/16" serrated flange nuts (items 4-5-6).
4. **Figure 7b:** Insert the chute (item 1) under the retaining plate (item 2) welded on the snowblower.

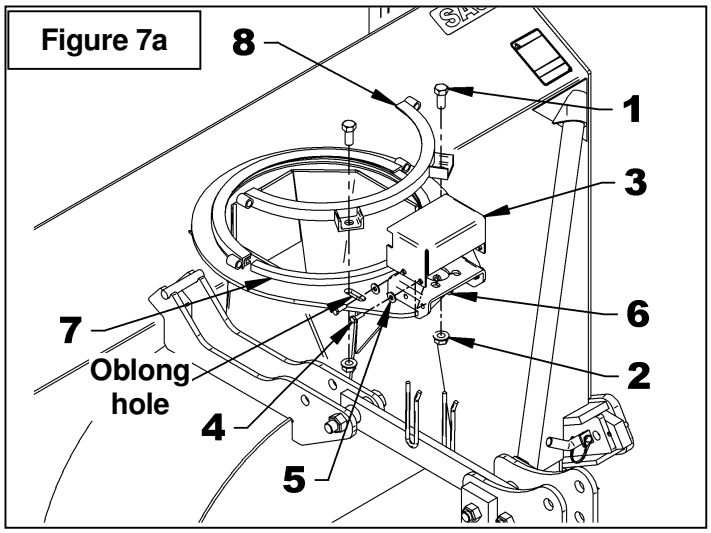

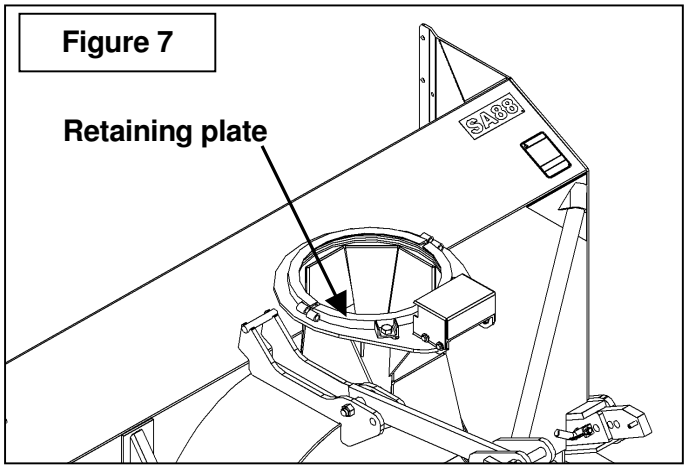

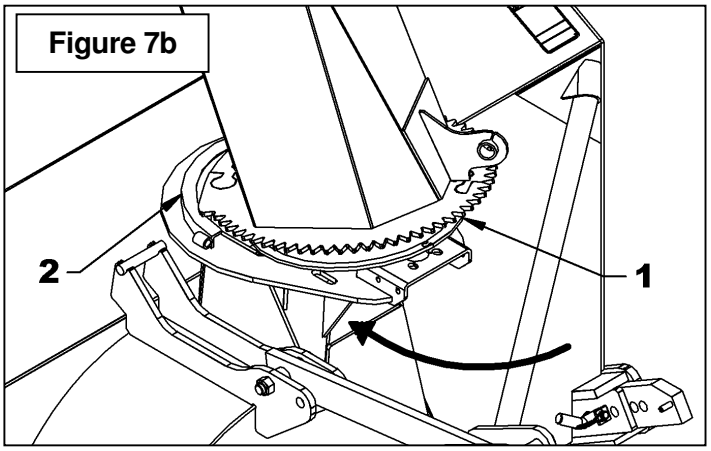

5. **Figure 7c:** Raise the chute slightly, about 1/4" and wind the rotation bushing (item 1) between the welded retaining plate and the chute (item 2) by inserting it as illustrated. Fold back the rotation bushing around the chute.

6. **Figure 7d:** Install the retaining plate (item 1) on the snowblower by bending each bushing end inside the retaining plate. Align the vertical holes of the retaining plate with the oblong holes (fig.7a) and fix with the two 5/8" x 1 1/2" bolts (item 2) and 5/8" serrated flange nuts. Do not tighten.

7. **Figure 7d:** Insert two 1/2" x 3 1/4" bolts (item 3) to join together the two retaining plates. Hit slightly the two bolt heads with a hammer in alternation to bring the two retaining plates closer together. If the retaining plate moves back after hitting it, screw in the 5/8" x 1 1/2" bolts (item 2) slightly. When the bolt ends (item 3) exceed the holes enough, secure with two 1/2" nylon insert lock nut until the two retaining plates are approximately 1/4" apart.

8. **Figure 7d:** Tighten the 1/2" x 3 1/4" bolts (item 3) to reduce the gap between the retaining plates until chute turns with a slight resistance.

9. **Figure 7d:** Tighten the two 5/8" x 1 1/2" nuts (item 2) securely according to the ***Torque Specification Table*** at the end of the manual.

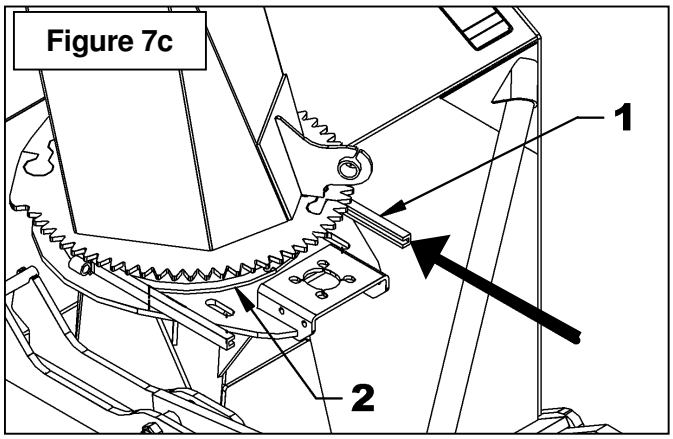

Figure 7c

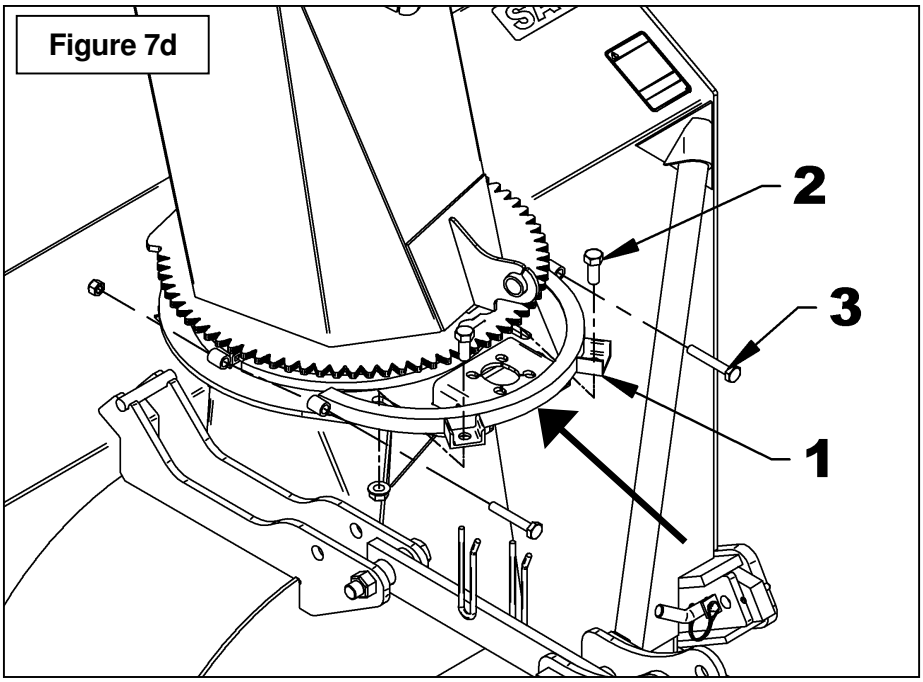

Figure 7d

Hydraulic Rotation with Gear – 8164B & BER0030 *(Figures 8-8a-8b)*

1. **Figure 8:** Install the motor (item 1) placing the anchor plate on top (item 2) as shown on figure. Attach with four 3/8"NC x 1 1/4" (item 3) hex. bolts, lockwashers and flat washers (items 4-5). Tighten manually.
2. **Figure 8:** Install the motor gear (item 6) with the key, 8mm x 20mm bolt (item 7), lockwasher and flat washer (items 8-9). Tighten according to the ***"Torque Specification Table"***.
3. **Figure 8:** Insert the anchoring flat bar (item 10) between the anchor plate (item 2) and the motor support as shown on figure. Screw the 3/8"NC nuts (item 11) at maximum on the two 3/8"NC x 1 1/2" lg bolts (item 12). Install those two bolts (item 12) by screwing them in the anchoring flat bar (item 10).
4. **Figure 8a:** Adjust the distance between the chute gear and the motor gear according to the following step:
   - **A.** Slightly unscrew the two bolts (item 17) that hold the retaining plate.
   - **B.** Screw the two nuts (item 18) simultaneously until the distance between the retaining plates and the chute base is leveled.
   - **C.** Retighten the bolts (item 17) according to the ***"Torque Specification Table"***. located at the end of the manual.
   - **D.** Adjust the gears to a distance between 1/32" and 1/16" by screwing the two bolts (item 12). Secure with the nuts (item 11) moving them against the anchoring flat bar (item 10). Tighten the four bolts (item 3) at 30 lbs-ft (41 N-M).
   - **E.** Run a test at low speed. If the gears have an irregular sound while testing, it means the adjustment is incorrect. Bring parts closer to each other until the sound becomes regular and even.
5. **Figure 8b:** Remove the gear and one of the four 3/8"NC x 1 1/4" bolts (item 3) holding the motor, apply Loctite® 243 on the bolt threads and tighten at 33 ft-lb (45 N-M). Repeat the same procedure with the other three bolts..
6. **Figure 8a:** Reinstall the gear and the cover (item 13) with four 5/16" x 1" bolts (item 14), 3/8" flat washers (item 15) on the outside and 5/16" serrated flange nuts (item 16) on the inside. Tighten according to the ***"Torque Specification Table"***.

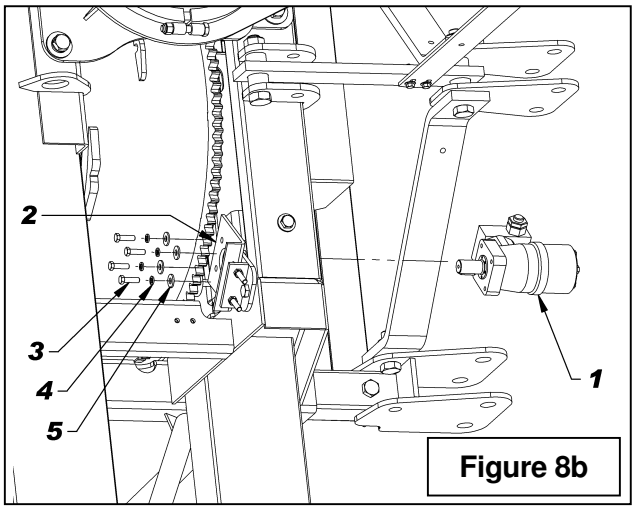

Figure 8b

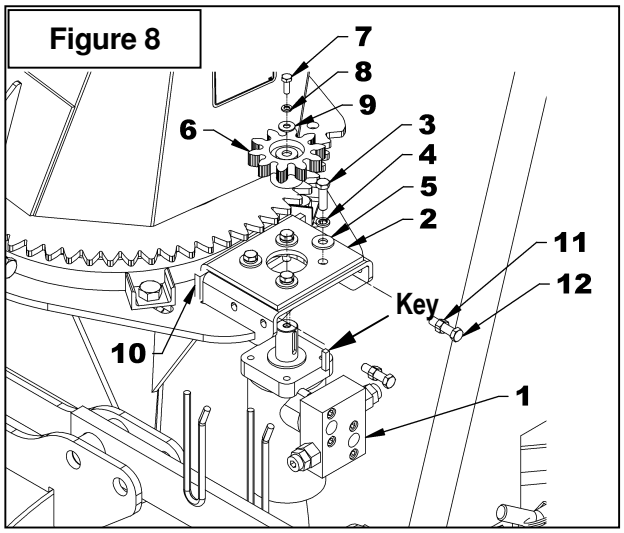

Figure 8

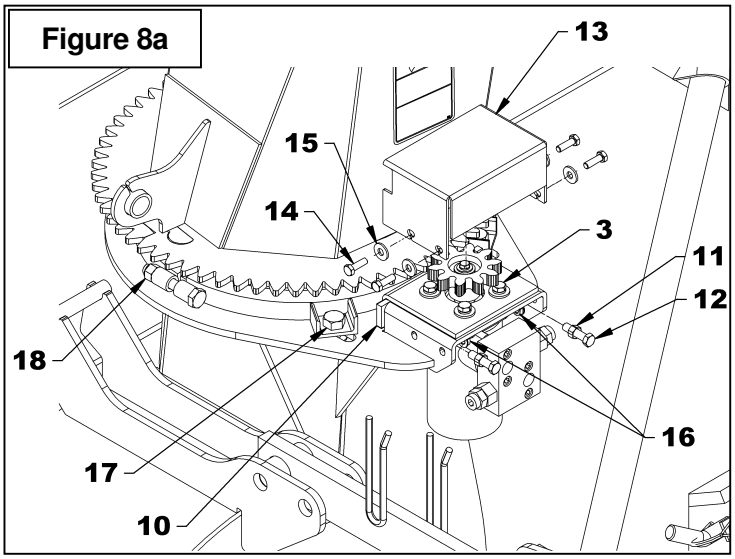

Figure 8a

Driveline Installation
(Figure 9)

1. Remove paint from snowblower gearbox drive shaft and grease driveline sliding surfaces and yoke.
2. Remove the two bolts of the yoke and slide driveline yoke over drive shaft using sliding action of the driveline. Make sure the driveline is well secured to the drive shaft by replacing the two bolts and tightening them according to the torque specification table.
6. Connect driveline to tractor drive P.T.O., making sure the driveline is well secured to the tractor.
7. Secure driveline safety chain to tractor master shield to prevent driveline shield from rotating.
8. Before operating the snowblower, raise the parking stand from the ground.

NOTE: Depending on tractor used, it may be necessary to install front tractor weights to maintain front-end stability.

Removing Snowblower from Tractor:

Select a level surface to detach. Lower the parking stand. Remove driveline from the tractor's PTO. Detach top link using adjustment as required. Detach right lower link using adjustable link to assist if necessary. Detach left lower link.

IMPORTANT: To avoid damage to the snowblower, retorque all bolts after the first 10 hours of operation.

NOTE: We recommend using the driveline chain when storing the snowblower.

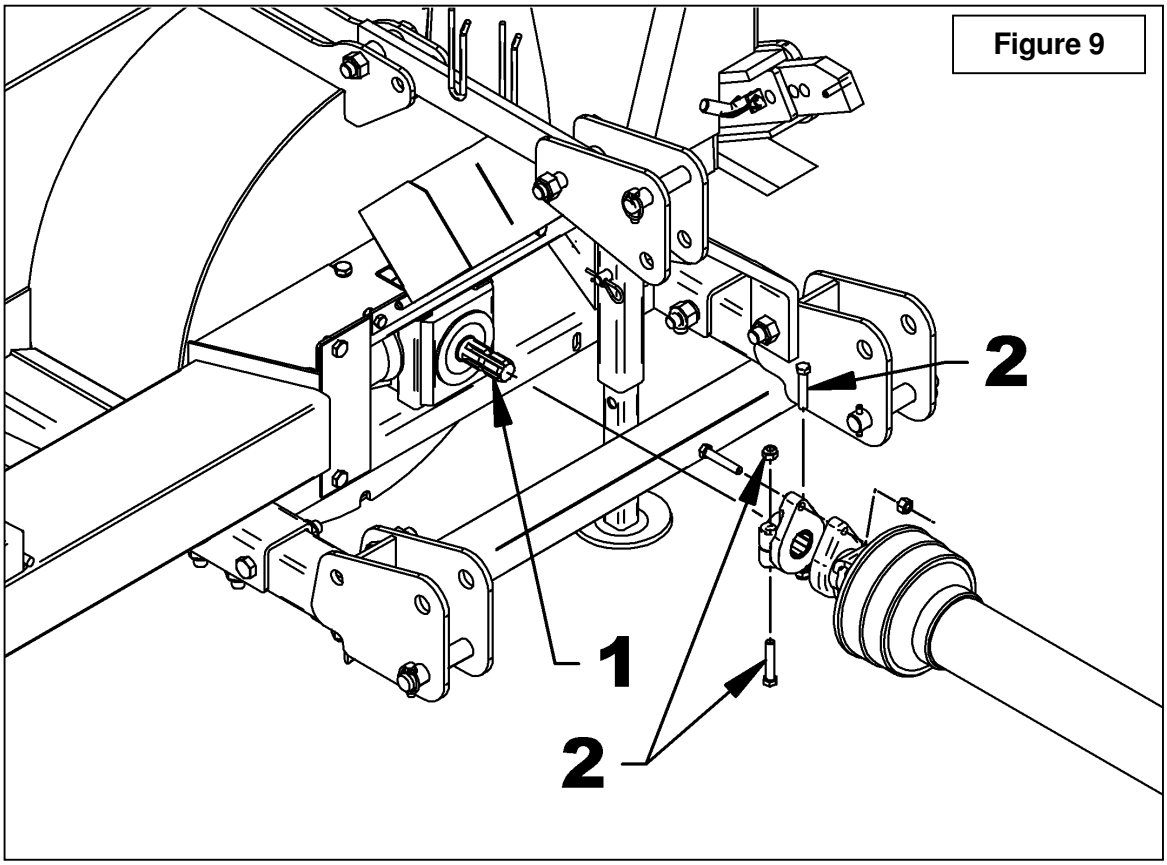

Figure 9

OPERATION

GENERAL PREPARATION

1. Read the operator's manual carefully before using the tractor and snowblower. Be thoroughly familiar with the controls and proper use of the equipment. Know how to stop the unit and disengage the controls quickly.

2. Make sure the snowblower is clear of snow before engaging the driveline.

3. Make sure the auger and fan operate freely.

4. Check the oil level in the worm gear box and if necessary, add SAE 80W90 gear oil, AGMA 5EP oil or equivalent.

5. Check the three shear bolts, one on each auger section and one between the fan and gearbox for proper tightness.

6. Adjust so that the snowblower skid shoes run level.

7. Wear adequate winter outer garments while operating equipment.

OPERATING CONTROLS

Deflector Adjustment

Set the angle of deflection according to the distance the snow must be thrown. To set the deflector angle, remove the hairpin from the adjustment tube, adjust the deflector to the appropriate angle and replace the hairpin.

Raising and Lowering the Snowblower

Move the three point lever down or forward to lower, and up or rearward to raise.

Work and Travel Speed

Working ground speed will depend on the depth and density of the snow to be cleared. Normally, ground speed will range from 4 to 7 MPH for light, dry snowfalls 3 to 6 inches, and 1 to 3 MPH for heavy, wet or drifted snow. To transport, disengage the drive shaft and raise the snowblower to full transport height.

WARNING: To avoid personal injury, be sure the tractor engine is off, the drive shaft disengaged, and all movement has stopped before making any adjustments.

Drive Shaft Operation

The mid drive shaft is activated by pulling up the drive shaft lever on left side of seat. Push down to disengage.

Skid Shoes Adjustment

Adjust the snowblower so that the skid shoes run level. Adjust the skid shoes according to the surface conditions so that stones are not thrown with the snow, and adjust upwards for smooth surfaces. Adjust both skid shoes to the same height to keep the cutting edge level.

To adjust skid shoes, loosen the bolts or remove the pin, and make the following adjustments:

Clearance between cutting edge and surface:

- *Level paved surface :* Adjust to 1/16" to 1/8"
- *Uneven or gravel surface:* Adjust to 1/2" and more according to size of gravel.

SNOW REMOVAL METHODS

When removing snow, do not use the snowblower as a dozer blade to push snow. Let the snowblower work its way through deep drifts. If the speed of your tractor is too fast, the snowblower may become overloaded and clog. For best results, raise the snowblower and remove a top layer of snow. A second pass with the snowblower will remove the remaining snow.

IMPORTANT : Use full RPM power when removing wet, sticky snow. Low RPM power will tend to clog the chute.

WARNING: Do not use hands or feet to unclog chute. Do not attempt to clear clogged chute of snow while tractor engine is running. If the chute clogs, disengage the drive shaft, shut off the tractor engine, remove the ignition key, wait for all movement to stop, and then clear the snow from the chute.

A definite pattern of operation is required to thoroughly clean the snow area. These patterns will avoid throwing snow in unwanted places as well as eliminating a second removal of snow.

PATTERN 1

DISCHARGE SNOW BOTH SIDES

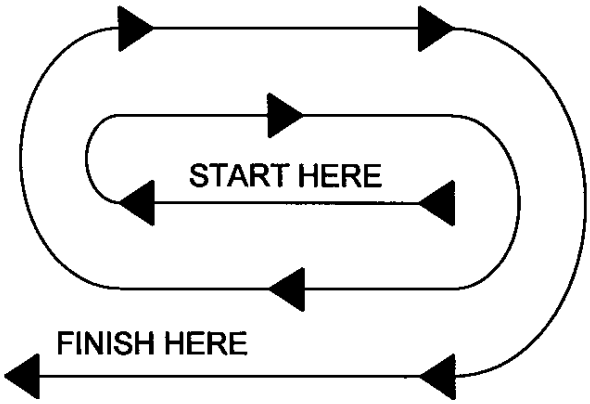

DISCHARGE SNOW BOTH SIDES

advantageous to start in the middle. Plow from one end to the other, throwing snow to both sides without changing the direction of the discharge guide

PATTERN 2

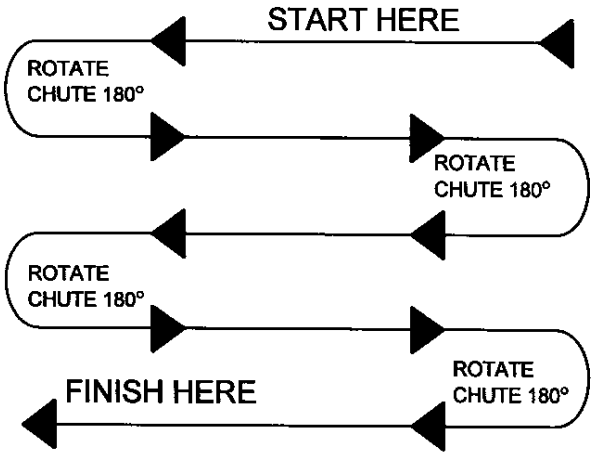

DISCHARGE SNOW THIS SIDE ONLY

side. At the end of the first pass, rotate the discharge guide 180 degrees for the return pass. At the end of each succeeding pass, rotate the discharge guide 180 degrees to maintain direction of throw in the same area.

MAINTENANCE

Shearbolts

Check the shearbolts indicated on the figure below at frequent intervals for proper tightness to be sure the blower is in safe working condition. If the shearbolts need replacement, use the following parts only:

Drive Shaft:

Shearbolt hex. 3/8" NC x 1 1/4" PTD, 3/8" nut NC and 3/8" lockwasher. Part #668029

Driveline:

Bolt M10 x 1.50mm x 55 mm gr. 8.8 PTD including nut. Part # 657199.

WARNING: Provide adequate blocking before working under the snowblower when in the raised position.

Driveline

IMPORTANT: When the snowblower is not used for more than two weeks, perform driveline maintenance and always store it in a dry place, away from bad weather conditions.

Chain Idler adjustment

1. Slightly loosen the adjustable idler nut
2. Slide a lever under idler (item 2) and lift idler by pressing beside drive sprocket (item 3) as to bring the tension spring (item 4) length to 9" maximum.
3. Tighten nut (item 1) according to the torque specification table.

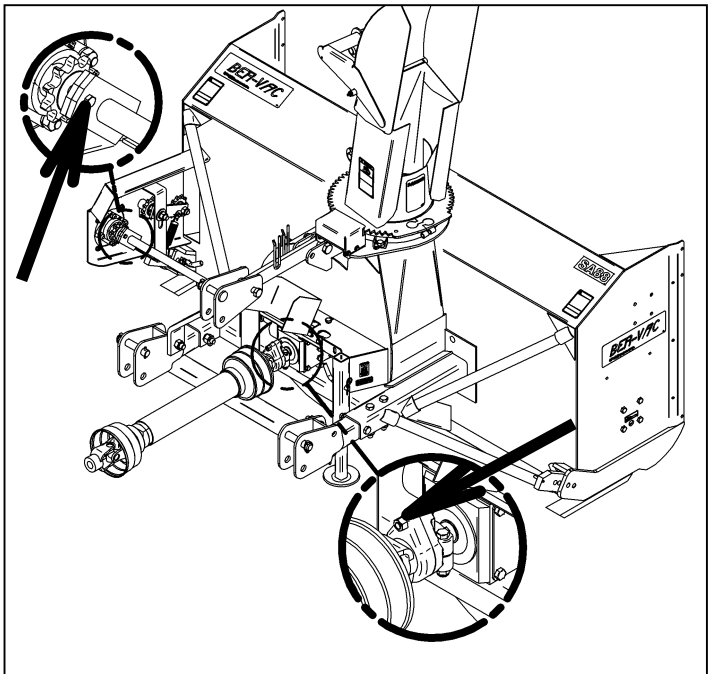

SHEARBOLTS

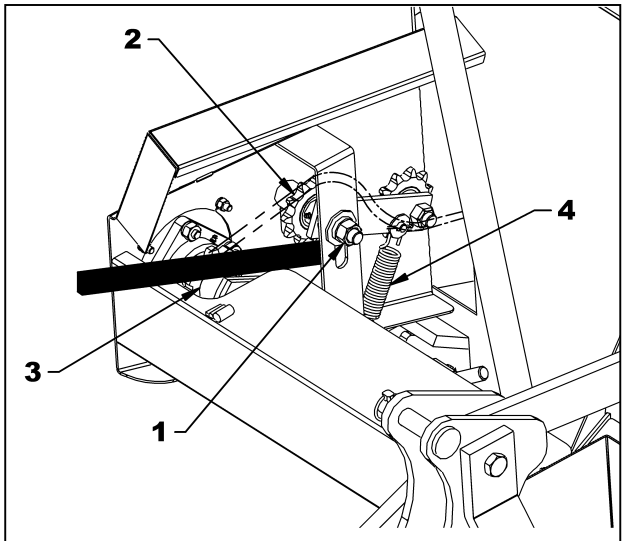

CHAIN IDLER

LUBRICATION

Use oil or a grease gun and lubricate as follows:

DESCRIPTION	INTERVAL	LUBRICATION REQUIRED
Driveline	8 hours	Grease each universal joint. Separate the sliding parts and cover each one of them with grease
	16 hours	Oil the push pins
Chain	4 hours and after each operation	Lubricate with chain lube
	24 hours	Grease chain idler
Drive Shaft	24 hours of operation	Grease fitting on shear plate
Gearbox	Every month	Check oil level. If needed, add AGMA 5EP extreme pressure oil, SAE 80W90 gear oil or equivalent.
	Once a year	Replace oil
Bearing	24 hours of operation	Grease each auger bearing

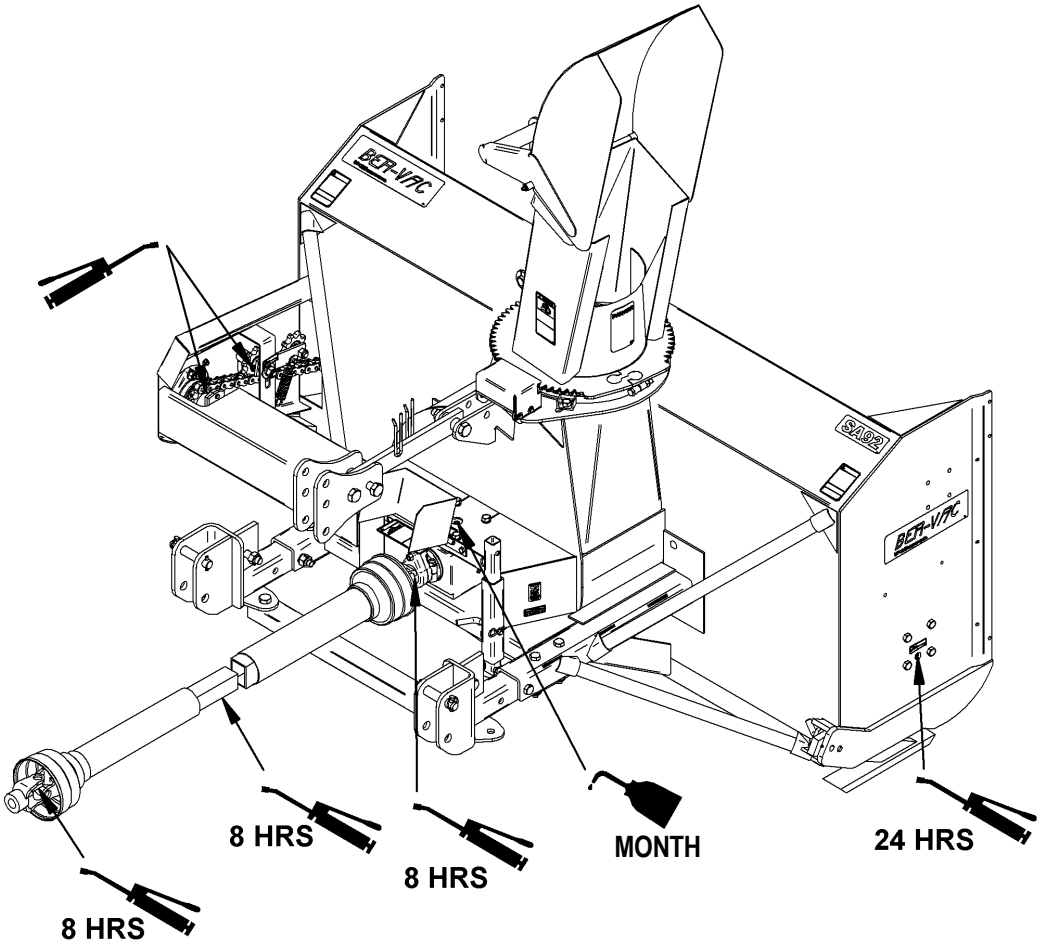

LUBRICATION

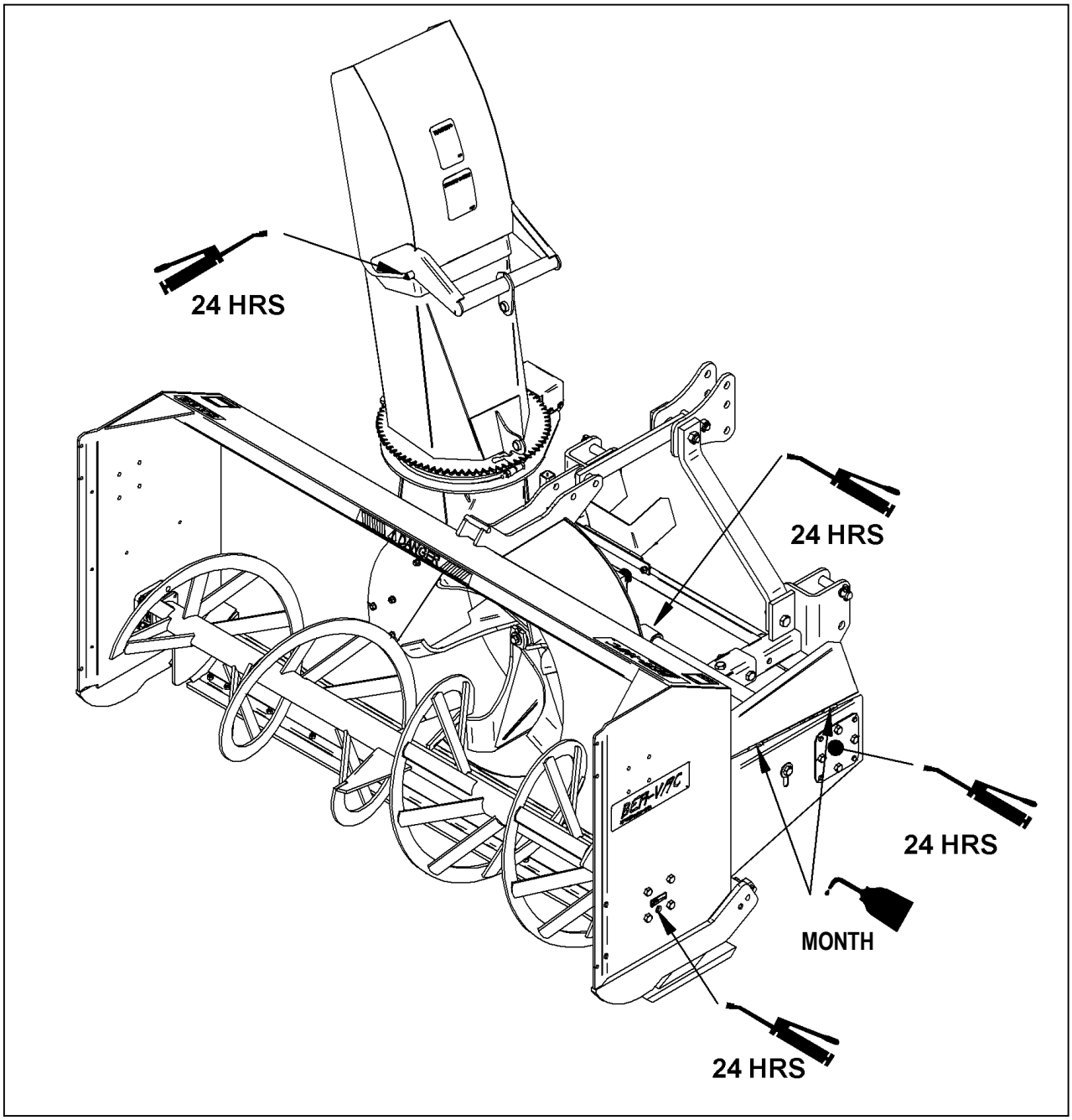

DRIVELINE TROUBLESHOOTING

	AVOIDABLE DAMAGES	POSSIBLE CAUSES	CORRECTIVE ACTIONS
QUICK-DISCONNECT YOKE 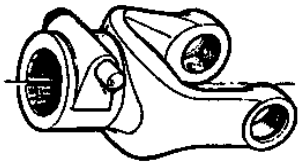	• Quick-disconnect pin tight or completely seized. • Quick-disconnect pin damaged (broken or bent) • Quick-disconnect pin damaged in the locking portion. 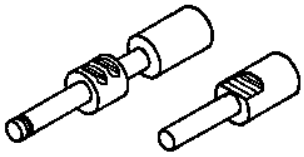	• Quick-disconnect pin dirty (insufficient maintenance). • Quick-disconnect pin defective (forced engagement, incorrect handling) • Excessive shaft length. • Axial loads too high.	• Clean, oil and follow service instructions. • Replace quick-disconnect pin. • Shorten shaft length (cut both telescopic tubes as well as shield and remove burrs). • Replace quick-disconnect pin. • Clean and grease telescopic tubes, and replace both tubes, if necessary. • Replace quick-disconnect pin.

Note: Quick-disconnect pins must be cleaned and greased every 16 hours.

	AVOIDABLE DAMAGES	POSSIBLE CAUSES	CORRECTIVE ACTIONS
YOKE 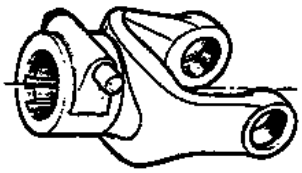	• Yoke ears deformation 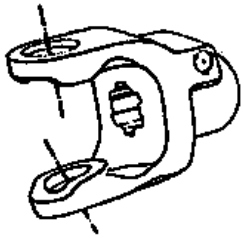 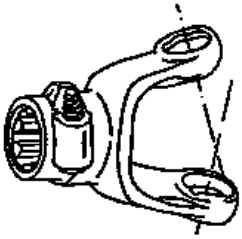	• Excessive shaft length. • Axial loads too high. • Excessive working angle and torque.	• Shorten shaft length (cut both telescopic tubes as well as shields and remove burrs). • Replace defective yokes. • Clean and grease telescopic tubes, and replace both tubes, if necessary. • Replace defective yokes. • Verify compatibility between shaft and working conditions (torque vs. angle). • Disengage tractor driveline during cornering or when lifting or lowering the implement. • Change to a larger driveline size. • Replace defective yokes.
	• Yoke ears distorted. 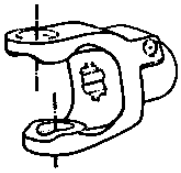	• Overload caused by high starting and peak torques.	• Engage driveline more carefully. • Use appropriate safety devices. • Replace defective yokes.
	• Yoke ears worn or pounded. 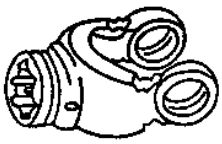	• Excessive working angle.	• Avoid excessive working angle. • Disengage tractor driveline during cornering. • Replace defective yokes.

	AVOIDABLE DAMAGES	POSSIBLE CAUSES	CORRECTIVE ACTIONS
CROSS KIT 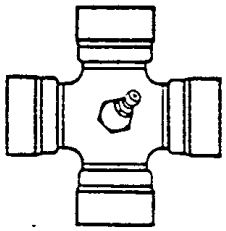	• Cross arms broken. 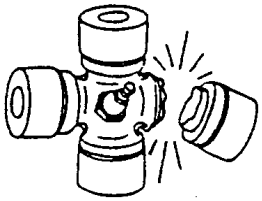	• Extreme torque peak or shock load. • Axial loads too high.	• Use appropriate safety device. • Change to a larger driveline size. • Shorten driveline shaft. • Replace defective cross bearings.
	• Bearing caps turning in their cross journal. • Overheated bearing caps.	• Excessive continuous torque and/or excessive working angle. • Inadequate greasing.	• Verify compatibility between shaft and working conditions. • Carefully follow greasing instructions. • Replace defective cross bearings.
	• Accelerated wear of cross kit. 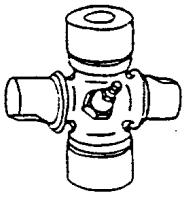	• Excessive continuous torque and/or excessive working angle. • Inadequate greasing.	• Verify compatibility between shaft and working conditions. • Carefully follow greasing instructions. • Replace defective cross bearings.

Note: Cross bearings must be greased every 8 working hours.

	AVOIDABLE DAMAGES	POSSIBLE CAUSES	CORRECTIVE ACTIONS
TELESCOPIC TUBES 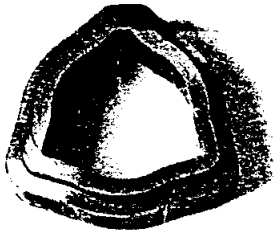	• Telescopic tubes failure or twisting. 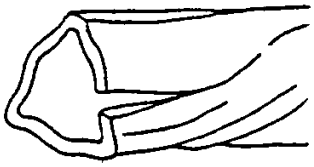	• Extreme torque peak or shock load. • Short tube engagement.	• Use appropriate safety device. • Change to a larger driveline size. • Replace the driveline drive shaft with one having adequate length. • Replace defective tubes.
	• Accelerated wear of telescopic tubes.	• Extreme load when sliding. • Short tube engagement. • Inadequate greasing. • Dirt	• Change to a driveline with rilsan coated inner tube. • Replace the driveline with one having adequate length. • Carefully follow greasing instructions. • Replace defective tubes.

Note: Telescopic tubes must be cleaned and greased every 8 working hours.

	AVOIDABLE DAMAGES	POSSIBLE CAUSES	CORRECTIVE ACTIONS
SHIELD 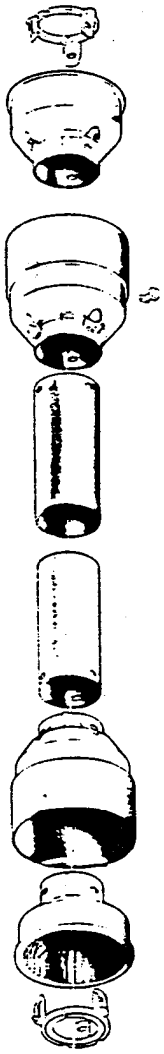	• Excessive wear of shield bearings. 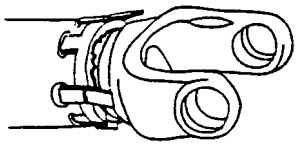	• Insufficient lubrication. • Incorrect chain mounting. • Shield interfering with implement.	• Follow lubrication instructions. • Mount chain to allow maximum angularity. • Avoid contact of the shields with fixed parts of the machine or tractor. • Replace shield bearings.
	• Chain moving or failure. 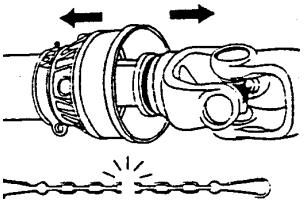	▪ Shield interfering with implement. ▪ Incorrect chain mounting.	• Avoid contact of the shields with fixed parts of the machine or tractor. • Mount chain to allow maximum angularity. • Replace defective parts.
	• Shield cone damaged. 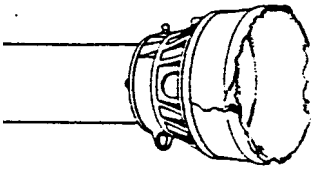	• Shield cone in contact with components on the tractor and/or implement. • Excessive angularity.	• Eliminate interference between Shield cones and any part on the tractor and/or implement. • Avoid excessive angle during cornering or when lifting or lowering the implement. • Replace damaged Shield cones.
	• Shield tubes damaged (deformed and split at one side). 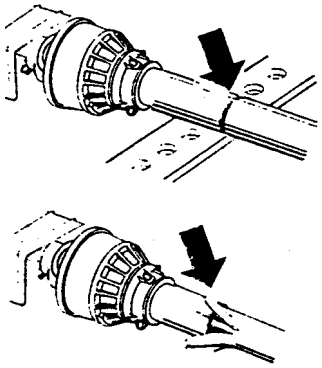	• Shields in contact with components on the tractor and/or implement. • Shield tubes overlap too short or no overlap at all with extended driveline.	• Eliminate interference between Shield cones and any part on the tractor and/or implement. • Replace damaged tubes. • Adjust Shield tubes length with longer tubes.

Note: Shield bearings must be greased every 8 working hours.

INTRODUCTION

All parts are illustrated in "exploded views" which show the individual parts in their normal relationship to each other. Reference numbers are used in the illustrations. These numbers correspond to those in the "Reference Number" (REF) column, and are followed by the description and quantity required.

O/L - "Obtain Locally" in the part number column indicates common hardware that is available at your local hardware supply.

All reference to right and left, forward or rearward from the operator's view standing behind the machine.

Orders must give the complete description, correct part number, the total amount required, the serial number, the method of shipment and the shipping address.

The manufacturer reserves the rights to change, modify, or eliminate from time to time, for technical or other reasons, certain or all data, specifications, or the product or products themselves, without any liability or obligation.

The parts listed here are available through your local dealer.

SNOWBLOWERS SA88 , SA92-L // FRONT

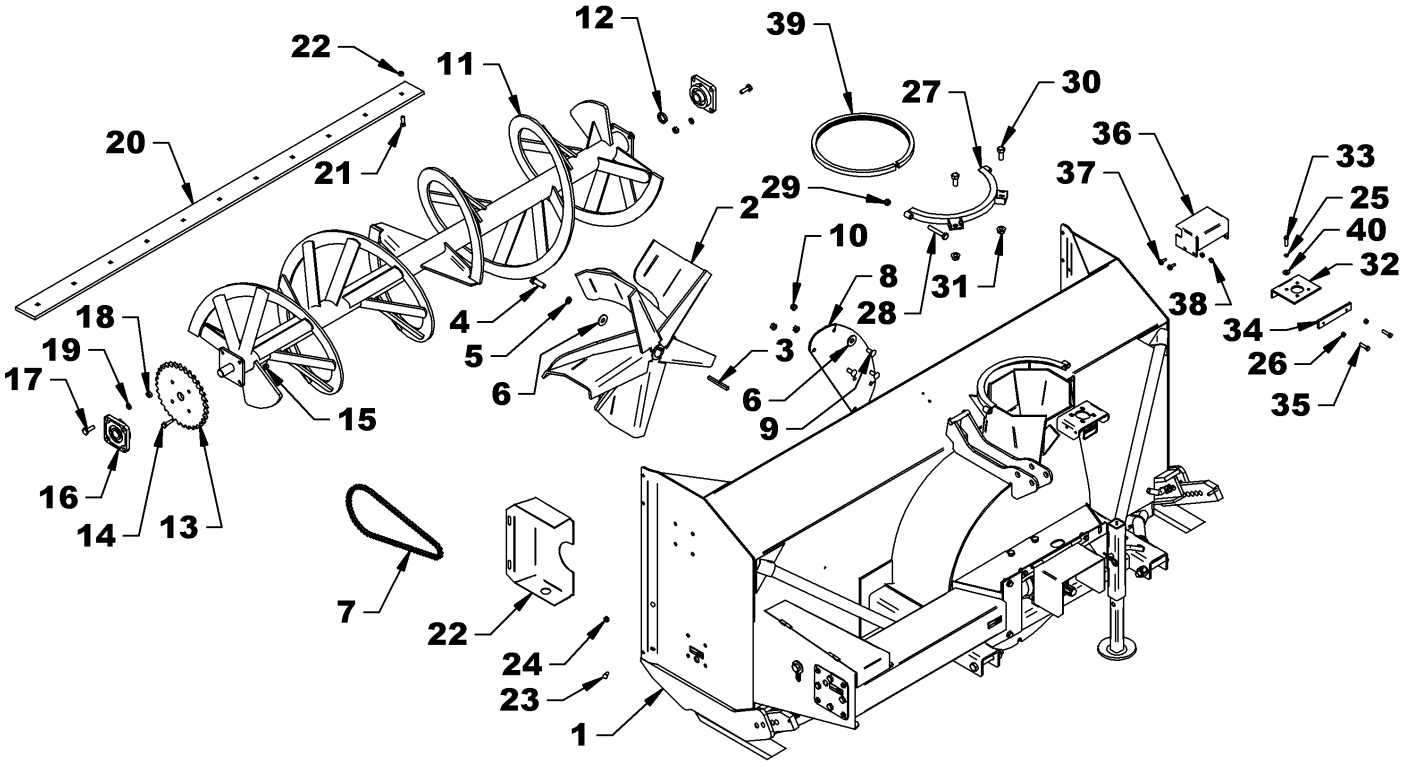

SNOWBLOWERS SA88 , SA92-L // FRONT

		SA88		SA92-L	
REF.	DESCRIPTION	QTY	PART #	QTY	PART #
1	Housing	---	---	---	---
2	Fan	1	668568	1	668568
3	Key 3/8" x 3/8" x 4" lg	1	4500075	1	4500075
4	Bolt hex. 5/8" NC x 2" gr.5 PTD	1	O/L	1	O/L
5	Lockwasher 5/8" PTD	3	O/L	3	O/L
6	Flat washer 11/16" hole PTD	2	O/L	2	O/L
7	Chain #80H x 80 links	1	3300041	1	3300041
	- Connecting link #80 H	1	3300007	1	3300007
	- Half-link	1	3300033	1	3300033
8	Restriction plate	1	666314	1	666314
9	Carriage bolt 1/2" NC x 1 1/4" gr.5 PTD	6	O/L	6	O/L
10	Flange nut 1/2NC, PTD	6	O/L	6	O/L
11	Auger	1	662239	1	667891
12	Spacer	1	655812	1	655812
13	Sprocket 1 1/4" hole dia.	1	3300043	1	3300043
14	Bolt hex. 7/16" NC x 1 1/2" gr.5 PTD	4	O/L	4	O/L
15	Stover lock nut7/16NC, PTD	15	O/L	17	1100004
16	Bearing 1 1/4" dia. hole.	2	4300001	2	4300001
17	Bolt hex. 1/2" NC x 1 1/2" gr.5 PTD	8	O/L	8	O/L
18	Nut hex. 1/2" NC PTD	8	O/L	8	O/L
19	Lockwasher 1/2" PTD	8	O/L	8	O/L
20	Cutting edge	1	667883	1	667886
21	Plow bolt 7/16" NC x 1 1/2" gr.5 PTD	11	O/L	13	O/L
22	Front guard	1	668089	1	668089
23	Carriage bolt 3/8" NC x 1" gr.5 PTD	2	O/L	2	O/L
24	Nut nylon insert 3/8" NC PTD	2	O/L	2	O/L
25	Lockwasher 3/8" PTD	4	O/L	4	O/L
26	Nut hex. 3/8" NC PTD	2	O/L	2	O/L
27	Retaining plate	1	665961		665961
28	Bolt hex. 1/2" NC x 3 1/4 gr.5 PTD	2	O/L	2	O/L
29	Nylon insert lock nut 1/2" NC PTD	2	O/L	2	O/L
30	Bolt hex. 5/8" NC x 1 1/2" gr.5 PTD	2	O/L	2	O/L
31	Nut nylon insert 5/8" NC PTD	2	O/L	2	O/L
32	Anchor plate	1	667338	1	667338
33	Bolt hex. 3/8" NC x 1 1/4" gr.5 PTD	4	O/L	4	O/L
34	Anchoring flat bar	1	667339	1	667339
35	Bolt hex. 3/8" NC x 1 1/2" gr.5 PTD	2	O/L	2	O/L
36	Gear shield	1	667929	1	667929
37	Serrated Flange Bolt hex. 5/16" NC x 1" gr.5 PTD	4	O/L	4	O/L
38	Serrated Flange Nut 5/16" NC PTD	4	O/L	4	O/L
39	Rotation bushing	1	667722	1	667722
40	Flat washer 7/16" hole PTD	4	O/L	4	O/L

SNOWBLOWERS SA88 , SA92-L // REAR

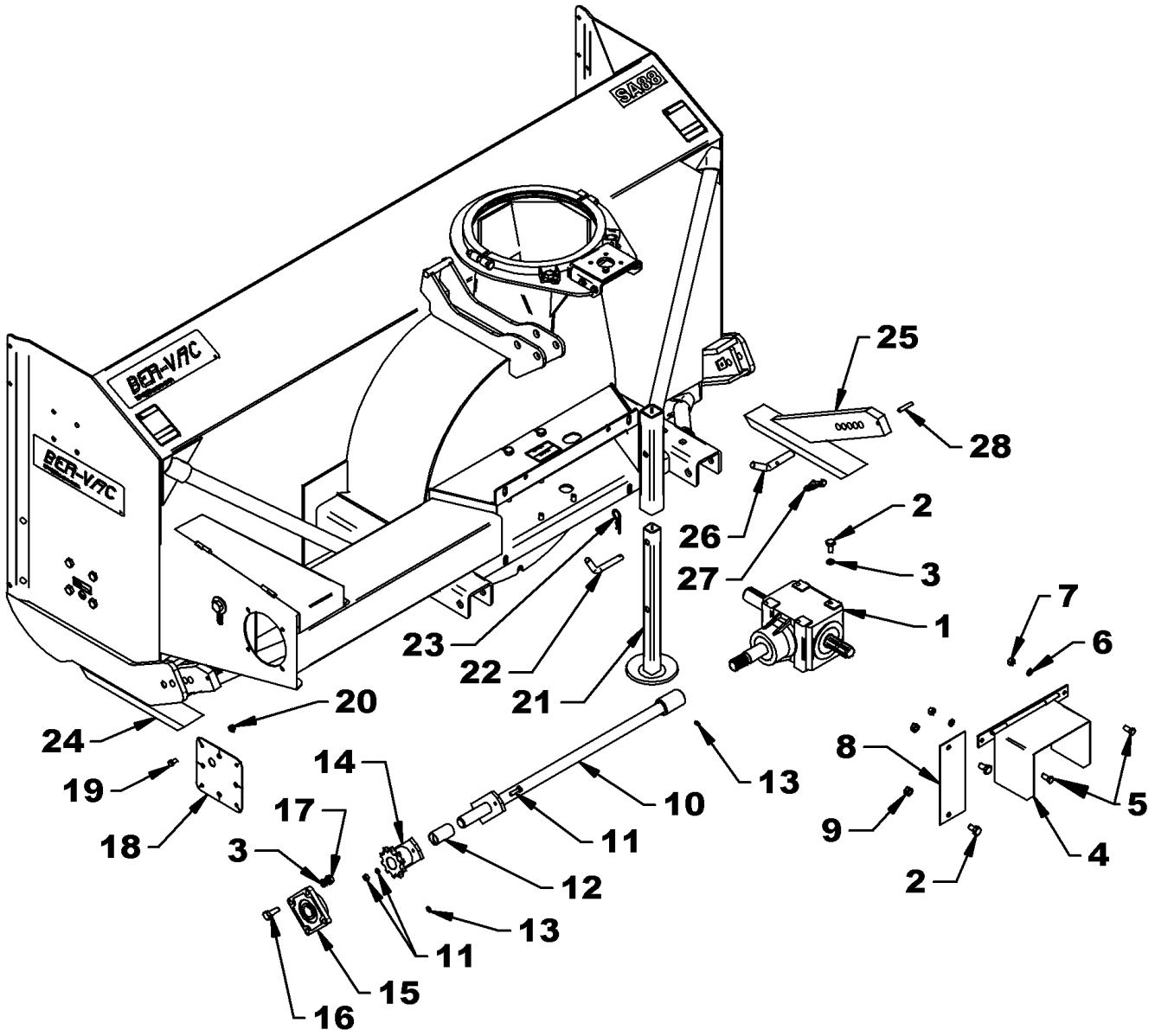

SNOWBLOWERS SA88 , SA92-L // REAR

		SA88		SA92-L	
REF.	DESCRIPTION	QTY	PART #	QTY	PART #
1	Gearbox assembly	1	662195	1	662195
2	Bolt hex. 1/2" NC x 1" gr.5 PTD	10	O/L	10	O/L
3	Lockwasher 1/2" PTD	12	O/L	12	O/L
4	PTO protector	1	663675	1	663675
5	Bolt hex 7/16" NC x 1" gr.5 PTD	2	O/L	2	O/L
6	Lockwasher 7/16" PTD	2	O/L	2	O/L
7	Nut hex. 7/16" NC PTD	2	O/L	2	O/L
8	Rear guard	1	667898	1	667898
9	Flange nut 1/2" NC PTD	2	O/L	2	O/L
10	Drive shaft	1	668028	1	668023
11	Shearbolt , flat washer, lock & nut	1	668029	1	668029
12	Bushing	1	4300072	1	4300072
13	Grease fitting 1/4" NF	2	654106	2	654106
14	Shear plate	1	668030	1	668030
15	Bearing 1 1/4" hole	1	4300001	1	4300001
16	Bolt hex. 1/2" NC x 1 1/2" gr.5 PTD	4	O/L	4	O/L
17	Nut hex. 1/2" NC PTD	4	O/L	4	O/L
18	Drive support	1	662687	1	662687
19	Bolt hex. 3/8" NC x 1" gr.5 PTD	4	O/L	4	O/L
20	Nut hex. 3/8" NC PTD	1	662252	1	662252
21	Parking stand	1	4600044	1	4600044
22	Pin 5/8" dia. x 3" lg, bent	1	O/L	1	O/L
23	Hairpin 4mm x 80mm lg. PTD	1	667876	1	667876
24	Left skid shoe	1	667875	1	667875
25	Right skid shoe	2	667899	2	667899
26	Pin 3/4" dia. x 3 13/16" lg , for skid shoe	2	O/L	2	O/L
27	Spring pin 3/8" x 2" PTD	2	O/L	2	O/L
28	Round wire lock pin 1/4" PTD	1	662195	1	662195

THREE POINT HITCH

REF.	DESCRIPTION	QTY	PART #
1	Lower hitch	2	668081
2	Hitch - LH	1	668083
3	Hitch - RH	1	668082
4	Upper hitch	1	668071
5	Brace	1	668084
6	Reinforcement plate	2	668117
7	Pin Cat. 2	2	4600042
8	Linchpin 7/16" dia. PQÉ	2	O/L
9	Bolt hex. 7/8" NC x 6" gr.5 PTD	1	O/L
10	Bolt hex. 7/8" NC x 4 1/2" gr.5 PTD	1	O/L
11	Bolt hex. 7/8" NC x 2" gr.5 PTD	2	O/L
12	Nut stover 7/8" NC PTD	4	O/L
13	Bolt hex. 3/4" NC x 4 1/2" gr.5 PTD	2	O/L
14	Bolt hex. 3/4" NC x 5 1/2" gr.5 PTD	2	O/L
15	Bolt hex. 3/4" NC x 5" gr.5 PTD	4	O/L
16	Lockwasher 3/4" PTD	8	O/L
17	Nut nylon insert 3/4" NC PTD	8	O/L
18	Hose support	1	668636
19	Hose clamp	2	666583
20	Bolt hex. 3/8" NC x 1 1/2" gr.5 PTD	2	O/L
21	Nut nylon insert 3/8" NC PTD	2	O/L
22	Bolt serrated flange 5/16" NC x 1 1/2" PTD	2	O/L
23	Nut serrated flange 5/16" NC PTD	2	O/L

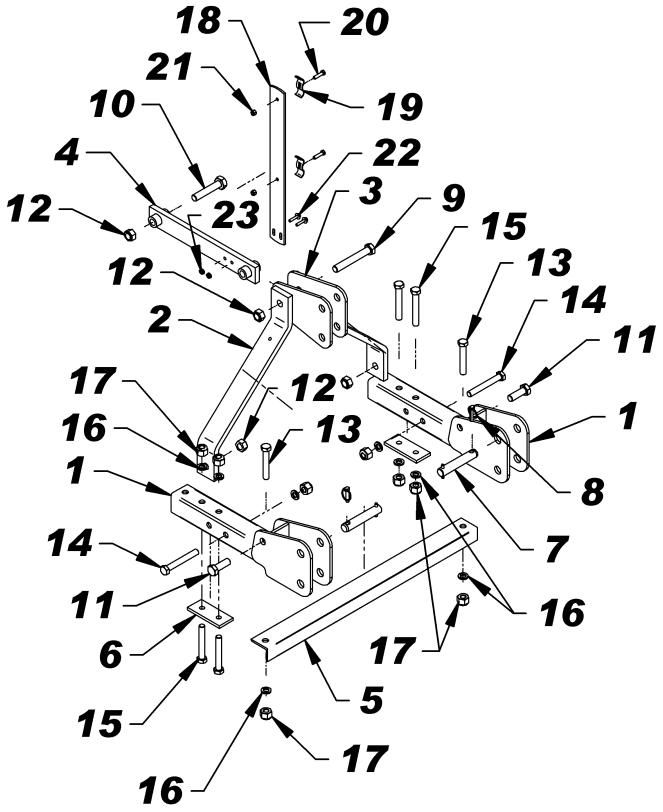

CHAIN IDLER

REF.	DESCRIPTION	QTY	PART #
1	Chain idler	1	667901
2	Idler sprocket	2	654756
3	Spacer	1	667900
4	Idler bushing	1	667951
5	Tension spring	1	2200019
6	Bolt hex. 3/4" NC x 2 3/4" gr.5 PTD	1	O/L
7	Spacer	1	667952
8	Flat washer 13/16" hole, structural, PTD	1	1400028
9	Stover lock nut 3/4" NC PTD	1	1100008
10	Flat washer 9/16" hole PTD	1	O/L
11	Cotter pin 1/8" dia. x 1 1/2" PTD	1	O/L
12	Bolt hex. 3/4" NC x 6" gr.5 PTD	1	O/L
13	Flat washer 13/16" hole PTD	2	O/L
14	Lockwasher 3/4" PQÉ	1	O/L
15	Nut hex. 3/4" NC PQÉ	1	O/L
16	Grease fitting 1/4" NF	1	654106

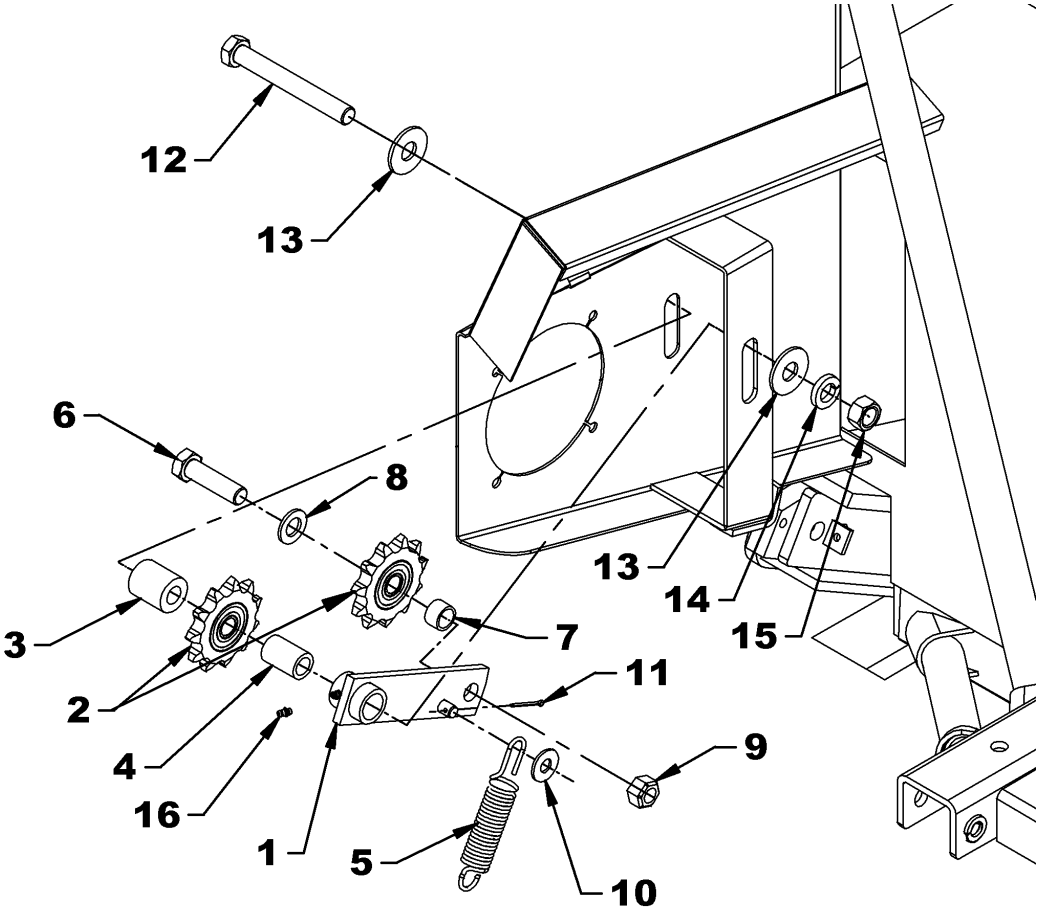

STANDARD CHUTE – 8242

REF.	DESCRIPTION	QTY	PART #
1	Chute base	1	667061
2	Deflector	1	667093
3	Hinge pin	1	667060
4	Grease fitting 1/8" NPT	1	656493
5	Flat washer 10MM hole, PTD	2	1400019
	OPTIONAL - 8089		---
6	Adjustment pipe	1	654076
7	Adjustment rod	1	654074
8	Hairpin 5mm dia. X 100mm PTD	1	1800003
9	Cotter pin 1/4" dia. x 2" PTD	2	O/L

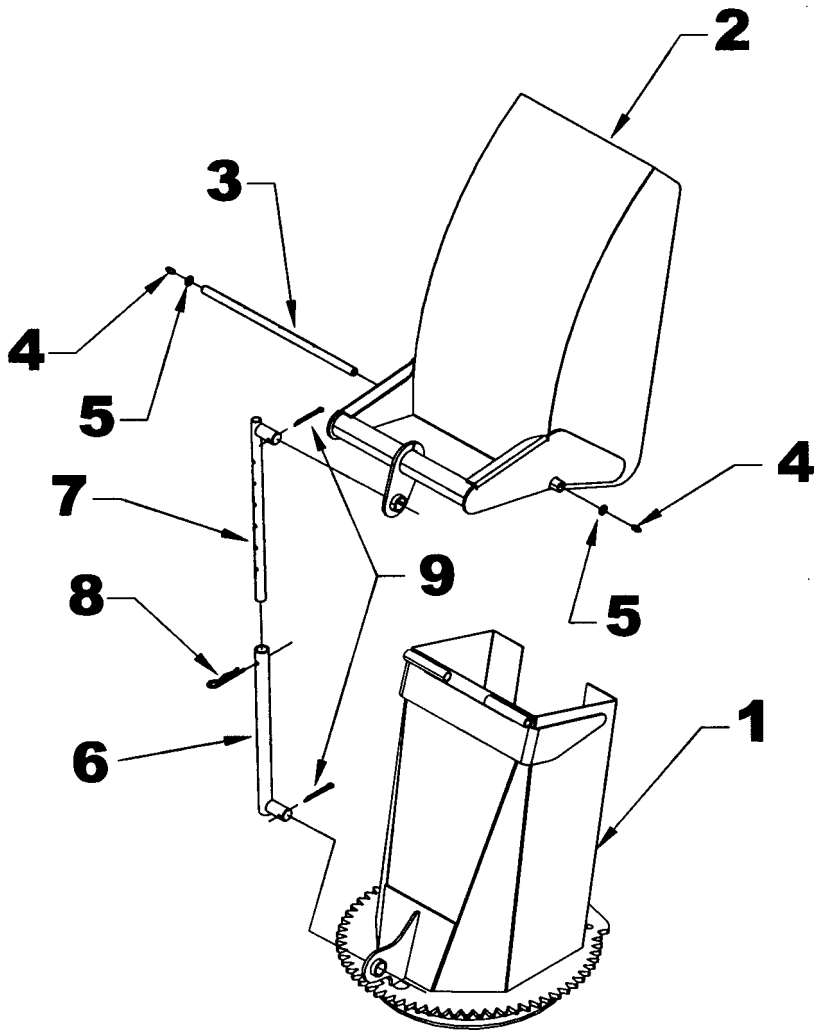

SEMI-INDUSTRIAL CHUTE – 8167B

REF.	DESCRIPTION	QTY	PART #
1	Upper deflector	1	667066
2	Middle deflector	1	667065
3	Chute base	1	667062
4	Pin 5/8" x 15 3/4" lg	1	667060
5	Pin 5/8" x 17 1/4" lg	1	667068
6	Flat bar	2	667059
7	Grease fitting 1/8" NPT	1	656493
8	Nut, nylon insert 3/4" NC PTD	4	O/L
9	Flat washer 10MM hole, PTD	4	1400019

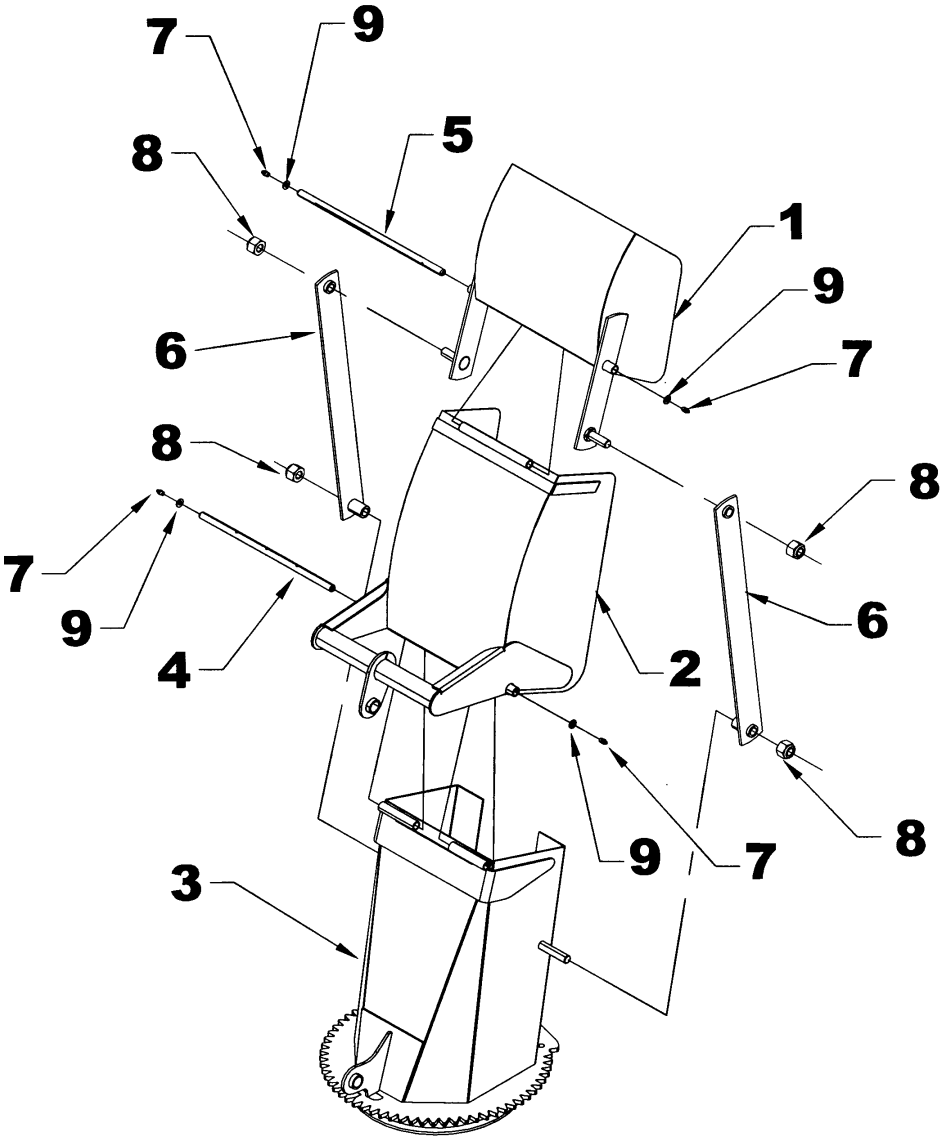

HYDRAULIC ROTATION BY MOTOR – 8164B & BER0030

REF.	DESCRIPTION	QTY	PART#
1	Hydraulic motor M+S for 8164B	1	3900016
	Seal kit	1	3900077
OR	Hydraulic motor EAGLE with safety valve for 8164B	1	3910012
	Seal kit	1	3910013
OR	Hydraulic motor EAGLE with safety valve for BER0030	1	3910016
	Seal kit	1	3910013
2	Safety valve	1	3900076
3	Motor gear	1	665930
4	Key 1/4" x 1/4" x 3/4" lg	1	654686
5	Allen socket head capscrew 5/16" NC x 1 1/2" lg PTD	4	0800031
6	Bolt hex. 8mm x 20mm gr.8.8 PTD	1	O/L
7	Lockwasher 5/16" PTD	1	O/L
8	Flat washer 5/16" (3/8" hole) PTD	1	O/L

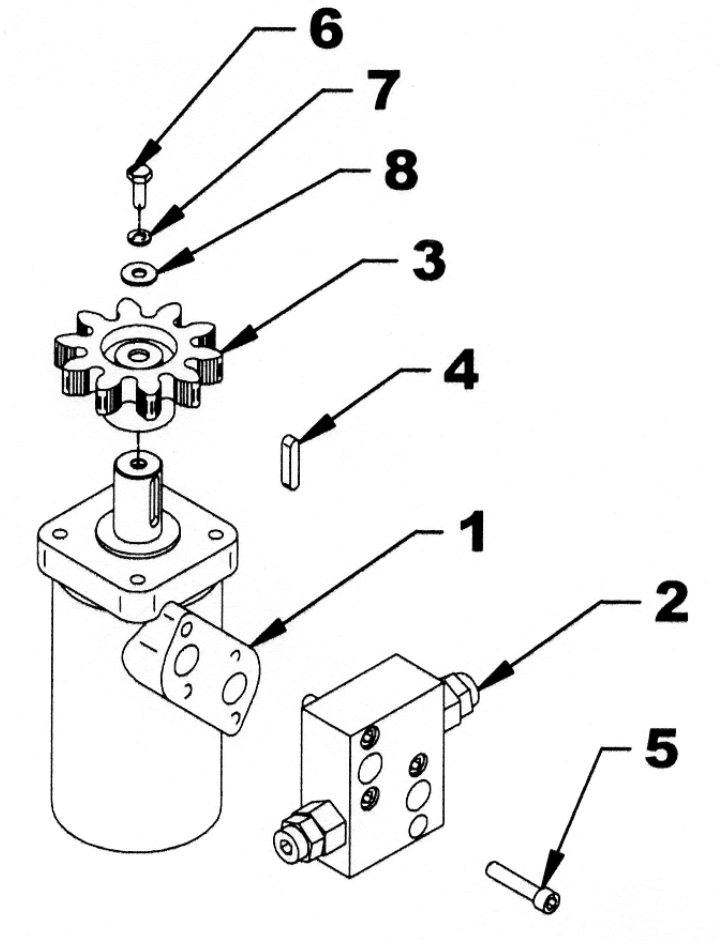

WORM GEAR BOX - 662195

REF.	DESCRIPTION	QTY	PART #
1	Casing	1	656640
2	Seal kit 35 x 72 x 10	1	659845
3	External retaining ring	1	656652
4	Spacer	2	656649
5	Bearing flange	1	656653
6	Spacer	1	656648
7	Internal retaining ring	1	656654
8	Bearing flange	1	656647
9	Shaft	1	656651
10	Gear	1	656645
11	External retaining ring	1	656646
12	Bearing flange	2	656641
13	Spacer	1	656644
14	Internal retaining ring	2	656642
15	Seal kit 40 x 80 x 12	2	656643
16	Shaft	1	662212
17	Gear	1	656657
18	Spacer	1	661146
19	Plug	1	656662
20	Cover	1	656660
21	Bolt hex. M10 x 14 gr.8.8	4	656659
22	Plug 3/8" NPT	2	655259

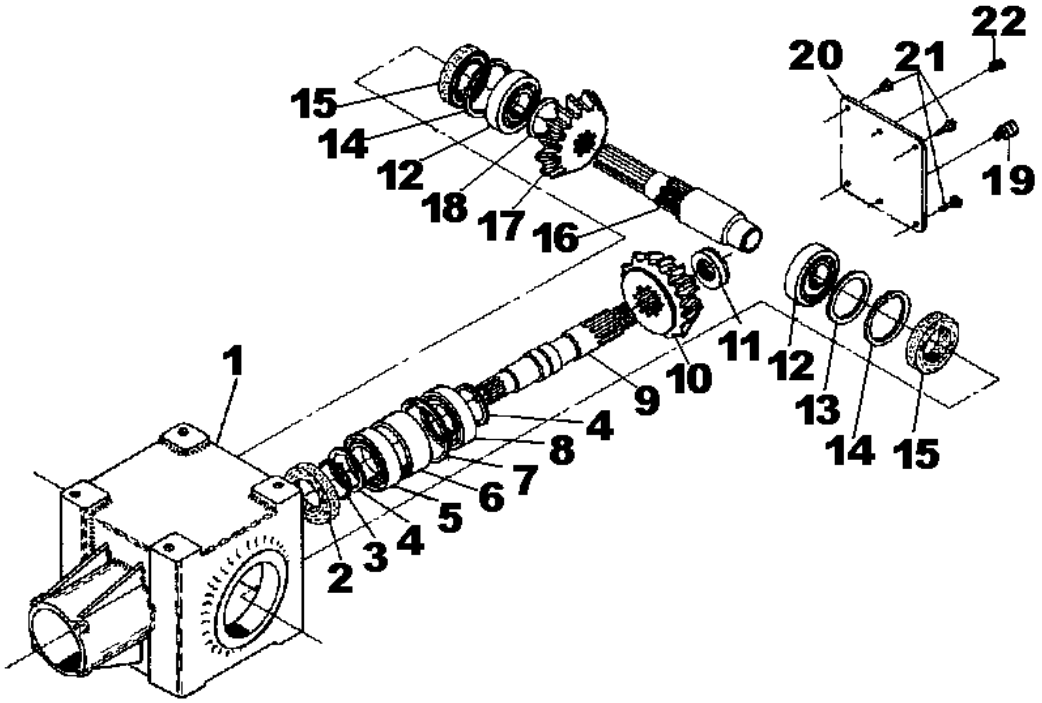

DRIVELINE - 662538

REF.	DESCRIPTION	QTY	PART #
1	Quick disconnect yoke assembly - slide collar	1	4700083
2	Universal joint kit	2	663134
3	Outer yoke	1	663136
4	Outer tube	1	663140
5	Inner tube	1	663142
6	Inner yoke	1	663144
7	Yoke and hub assembly	1	663145
8	Bolt and nut	2	662199
9	Grease fitting	1	663148
10	Ball	24	663162
11	Shear bolt and nut, M10 x 1.5 x 55 mm gr. 8.8 PTD	1	657199
12	Shields with safety chain	1	663150
13	Outer circlip	1	4700084
14	Sliding sleeve collar	1	4700085
15	Spring	1	4700086
16	Fixed sleeve	1	4700087
17	Ball 1/2"	3	4700088

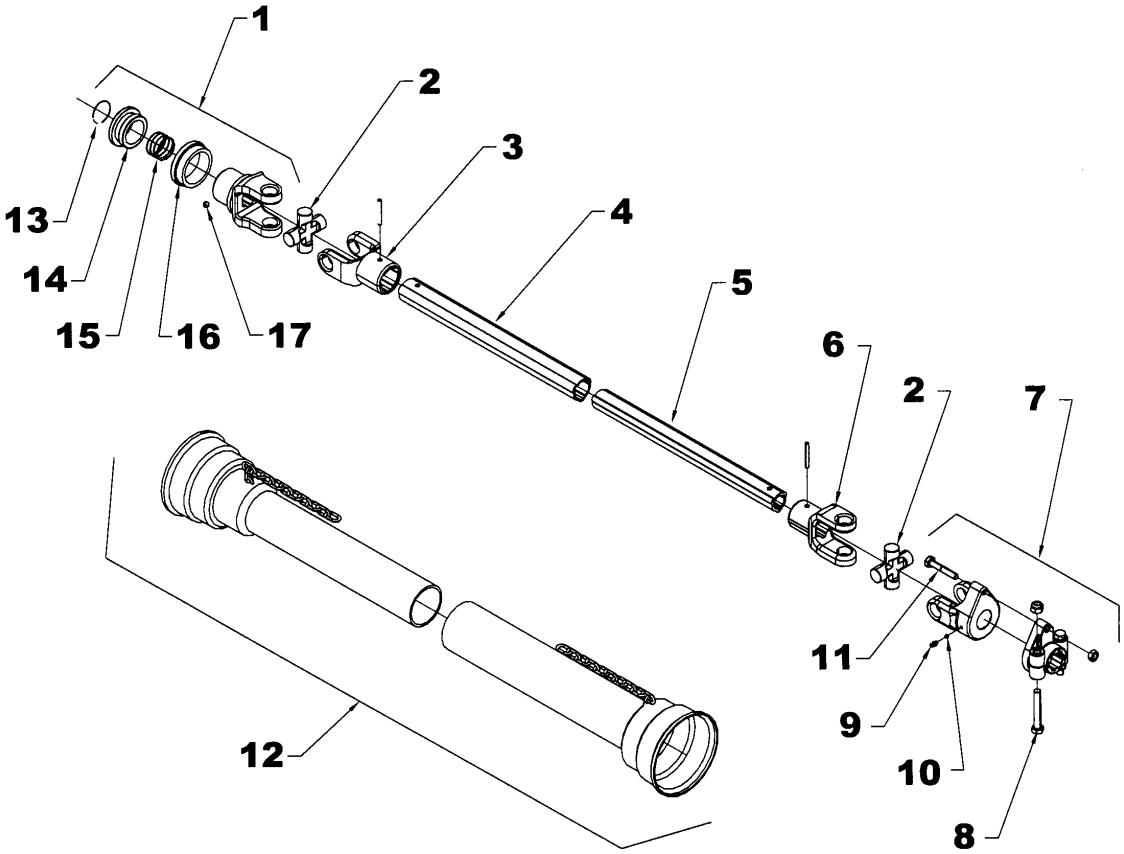

AVAILABLE OPTIONS

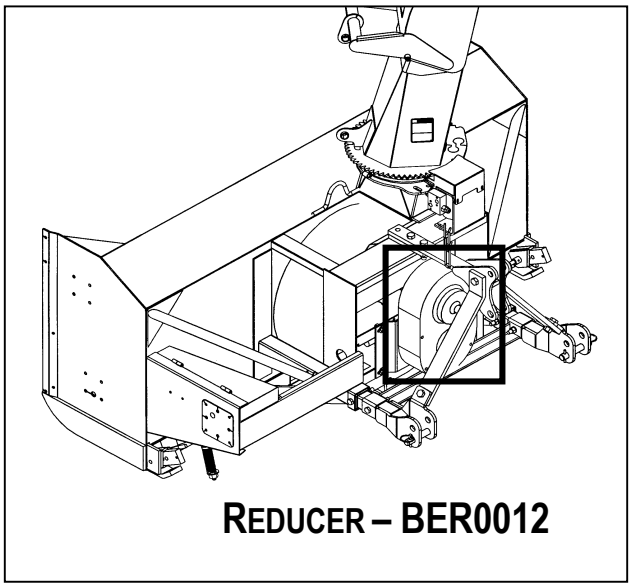

REDUCER – BER0012

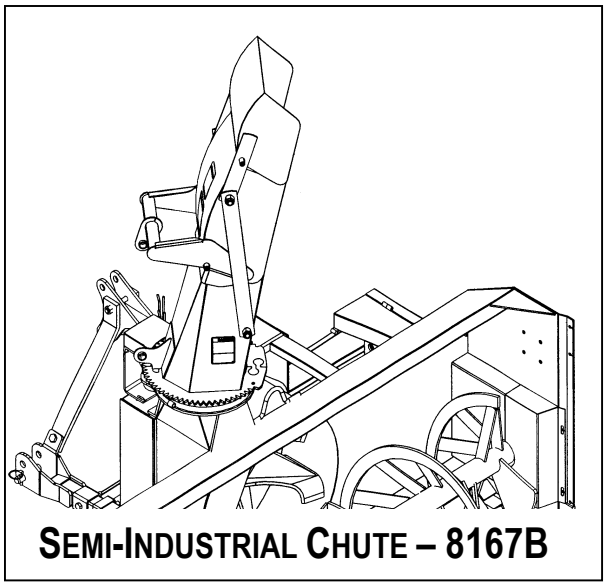

SEMI-INDUSTRIAL CHUTE – 8167B

DRIVELINE SERIES 8 - 8030

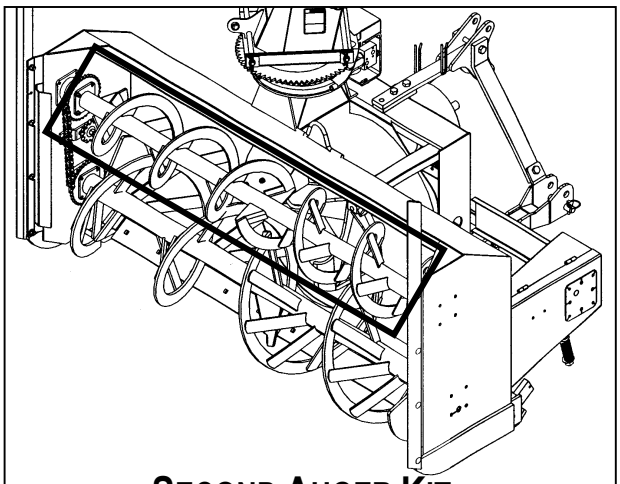

SECOND AUGER KIT
SA88 – 9462
SA92-L – BER0014

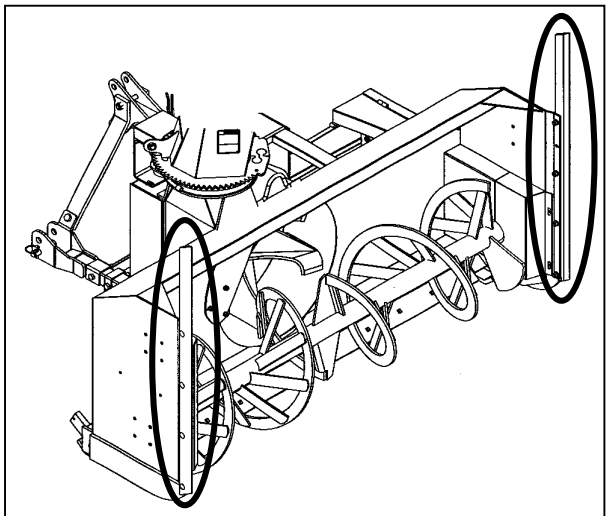

DRIFT CUTTERS- 8098

WARRANTY

RADTECH warrants to the original buyer that the equipment is free from defects in material and workmanship. RADTECH's obligation, under this warranty, will be limited to the repair or replacement of any non-wear part or component, which RADTECH finds to be defective within **one year** from the date of original purchase (unless otherwise-specified). The applicable warranty period for commercial or rental use shall be ninety (90) days from the date of purchase

In no event shall RADTECH be liable for consequential, special, direct or indirect damages incurred by the buyer/user.

All components not manufactured by RADTECH (such as motors, actuators, hydraulic components, tires, ...etc.) are covered by the original manufacturer's warranty in conjunction with RADTECH

RADTECH's obligation under this warranty shall be limited to repairing or replacing, free of charge to the original purchaser, any part that, in RADTECH's judgment, shall show evidence of such defect, provided the **distributor** returns the part prepaid within thirty (30) days from date of failure.

This warranty shall not be interpreted to render RADTECH liable for injuries or damages of any kind or nature to person or property. This warranty does not extend to losses because of delays, or to any expenses or losses incurred for labor, substitute machinery, rental or for any other reason.

Except as set forth above, RADTECH shall have no obligation or liability of any kind on account of any of its equipment and shall not be liable for special or consequential damages. RADTECH makes no other warranty, expressed or implied, and specifically, RADTECH disclaims any implied warranty or merchantability or fitness for a particular purpose**. Some states or provinces do not permit limitations or exclusions of implied warranties or incidental or consequential damages, so the limitations or exclusions in this warranty may not apply.**

This warranty is subject to any existing conditions of supply, which may directly affect our ability to obtain materials or manufacture replacement parts. RADTECH reserves the right to make improvements in design or changes in specifications at any time, without incurring any obligation to owners of units previously sold.

No one is authorized to alter, modify or enlarge this warranty nor the exclusions, limitations and reservations.

2835 Chemin de l'Aéroport, Thetford Mines (Québec) G6G 5R7

Tel.: (418) 338-4499 Fax: (418) 388-6090
Internet : www.radinter.com e-mail : radtech@radinter.com

TORQUE SPECIFICATION TABLE

GENERAL SPECIFICATION TABLE Use the following torques when special torques are not given Note: These values apply to fasteners as received from supplier, when dry. These values do not apply if lubricants are used.		
BOLT SIZES (SAE)	**TORQUE**	
INCHES	**Pounds-Foot**	**Newtons-Meter**
1/4	5	7
5/16	10	14
3/8	20	27
7/16	25	41
1/2	88	119
9/16	121	144
5/8	145	224
3/4	297	403
7/8	440	597
1	638	865
1 1/8	840	1139
1 1/4	1180	1400
1 3/8	1570	2129
1 1/2	2070	2807

BOLT SIZES (METRIC)	**TORQUE**	
MILLIMETERS	**Pounds-Foot**	**Newtons-Meter**
M6	10	13
M8	22	30
M10	40	54
M12	59	80
M14	93	126
M14	130	176
M18	148	228
M20	205	278

Manufactured by:

RADTECH
2835, Chemin de l'Aéroport
Thetford Mines, Québec, Canada, G6G 5R7
TEl.: (418) 338-4499 - Fax: (418) 338-6090
E-mail : radtech@radinter.com
Internet : www.radinter.com

Printed in Canada